HIGH EFFICIENCY CONDENSING COMBINATION BOILER

Saunier Duval

Instructions for use
Installation and servicing

Semia CONDENS

Semia Condens F24 E	G.C. 47-920-51
Semia Condens F30 E	G.C. 47-920-52

spares & parts online
IBASIS.co.uk©

Saunier Duval

Index

1 Important information 2

2 Guarantee registration 3

3 Appliance use 4

4 Servicing 4

5 Recycling 4

6 Operating the boiler (user instructions) 5

6.1 Control panel 5
6.2 Commissioning and lighting 5
6.3 To program daily timeclock 5
6.4 Temperature adjustment 6

7 Turn the boiler off 6

8 Fault finding 6

9 Frost protection 9

9.1 Boiler frost protection 9
9.2 Frost protection activation 9

10 Maintenance/After Sales Service 9

1 Important information

WARNINGS

Gas Leak or Fault

Turn off the gas emergency control valve immediately. Eliminate all sources of ignition, i.e. smoking, blowlamps, hot air guns, etc. Do not operate electrical lights or switches either on or off. Open all doors and windows, ventilate the area.

Sheet Metal Parts

This boiler contains metal parts (components) and care should be taken when handling and cleaning, with particular regard to edges.

Sealed Components

Under no circumstances must the User interfere with or adjust sealed parts.

Gas Category

This boiler is for use only on G20 natural gas, but the 30cxi may be converted for use on G31 gas (Propane L.P.G.).

Gas Safety (Installation and Use) Regulations

In your own interests and that of safety, it is the Law that ALL gas appliances are installed by a competent person in accordance with the current issue of the above regulations.

Testing and Certification

This boiler is tested and certificated for safety and performance. It is, therefore, important that no alteration is made to the boiler, without permission, in writing, by Saunier Duval.

Any alteration not approved by Saunier Duval, could invalidate the certification, boiler warranty and may also infringe the current issue of the statutory requirements.

CE Mark

This boiler meets the requirements of Statutory Instrument, No. 3083 The Boiler (Efficiency) Regulations, and therefore is deemed to meet the requirements of Directive 92/42/EEC on the efficiency requirements for new hot water boilers fired with liquid or gaseous fuels.

Type test for purposes of Regulation 5 certified by: Notified body 0087.

Product/production certified by: Notified body 0086.

The CE mark on this appliance shows compliance with:

1. Directive 90/396/EEC on the approximation of the laws of the Member States relating to appliances burning gaseous fuels.
2. Directive 73/23/EEC on the harmonisation of the Laws of the Member States relating to electrical equipment designed for use within certain voltage limits.
3. Directive 89/336/EEC on the approximation of the Laws of the Member States relating to electromagnetic compatibility.

Control of Substances Hazardous to Health

Under Section 6 of The Health and Safety at Work Act 1974, we are required to provide information on substances hazardous to health.

The adhesives and sealants used in this appliance are cured and give no known hazard in this state.

Insulation Pads / Ceramic Fibre

These can cause irritation to skin, eyes and the respiratory tract.

If you have a history of skin complaint you may be susceptible to irritation. High dust levels are usual only if the material is broken.

Normal handling should not cause discomfort, but follow normal good hygiene and wash your hands before eating, drinking or going to the lavatory.

If you do suffer irritation to the eyes or severe irritation to the skin seek medical attention.

Electrical Supply

The boiler must be earthed.

All system components shall be of an approved type and all wiring to current I.E.E. wiring regulations.

External wiring must be correctly earthed, polarised and in accordance with the relevant standards.

In GB this is BS 6891.

In IE this is the current edition of I.S.813 “Domestic Gas Installations”.

The boiler must be connected to a permanent 230V ac, 50Hz supply.

Connection of the whole electrical system of the boiler, including any heating controls, to the electrical supply must be through one common isolator and must be fused 3 Amp maximum.

Isolation should be by a double pole switched fused spur box, with a minimum gap of 3mm for both poles. The fused spur box should be readily accessible and preferably adjacent to the appliance. It should be identified as to its use.

Alternatively connection can be made through an unswitched shuttered socket and 3A fused 3-pin plug both to the current issue of BS 1363 may be used, provided they are not used in a room containing a bath or shower.

Wiring to the boiler must be PVC 85°C insulated cable, not less than 0.75mm2 (24/0.20mm).

2 Guarantee registration

Thank you for installing a new Saunier Duval appliance in your home.

Saunier Duval appliances' are manufactured to the very highest standard so we are pleased to offer our customers' a Comprehensive Guarantee.

This product is guaranteed for 24 months from the date of installation or 30 months from the date of manufacture, whichever is the shorter, for parts. In addition this product is guaranteed for 12 months from the date of installation or 18 months from the date of manufacture, whichever is the shorter, for labour.

The second year of the parts guarantee, from the beginning of the 13th month onwards after installation, is conditional upon the boiler having been serviced by a CORGI registered gas installer, in accordance with the manufacturer's recommendations. We strongly recommend regular servicing of your gas appliance, but where the condition is not met, any chargeable spare parts of components issued within the applicable guarantee period still benefit from a 12 month warranty from the date of issue by the manufacturer.

We recommend you complete and return as soon as possible your guarantee registration return literature, supplied in the document envelope.

If your guarantee certification return literature is missing you can obtain a copy by telephoning the Saunier Duval Customer Service number 00 44 (0)1773 525914.

REGISTER YOUR SAUNIER DUVAL APPLIANCE DIRECTLY BY CALLING

00 44 (0)870 240 3413

Customer service:

Saunier Duval GB Great Britain:
Tel. 00 44 (0)1773 525914
Fax. 00 44 (0)1773 828070
Saunier Duval,
Nottingham Road, Belper, Derbyshire. DE56 1JT

Saunier Duval IE Ireland:
Tel. 00 3531 4508120
Taney Distribution
Unit 4, Riverside Industrial Estate
Bluebell Avenue
Dublin 12

Technical Advice Line:

Tel. 00 44 (0)1773 828400

General and Sales enquires:

Tel. 00 44 (0)870 606 4351
Fax. 00 44 (0)1773 820569

benchmark
The code of practice for the installation, commissioning & servicing of gas central heating

Saunier Duval

3 Appliance use

Saunier Duval's appliances are manufactured according to the latest technical evolutions and current safety regulations.

This appliance is used to produce hot water using gas. Any other use is considered inappropriate and is forbidden.

The manufacturer shall not be responsible for any damage caused by another use. In that case the user shall be the responsible party.

4 Servicing

- Clean the case of the appliance with wet soapy cloth.
- Do not use any abrasive cleaning product as they could damage the housing or plastic parts.
- Also see section 12 & 35.

5 Recycling

The appliance comprises many recyclable parts. The packaging, the appliance and the content of the package shall not be thrown together with domestic waste but eliminated according to the current regulations.

6 Operating the boiler (user instructions)

6.1 Control panel

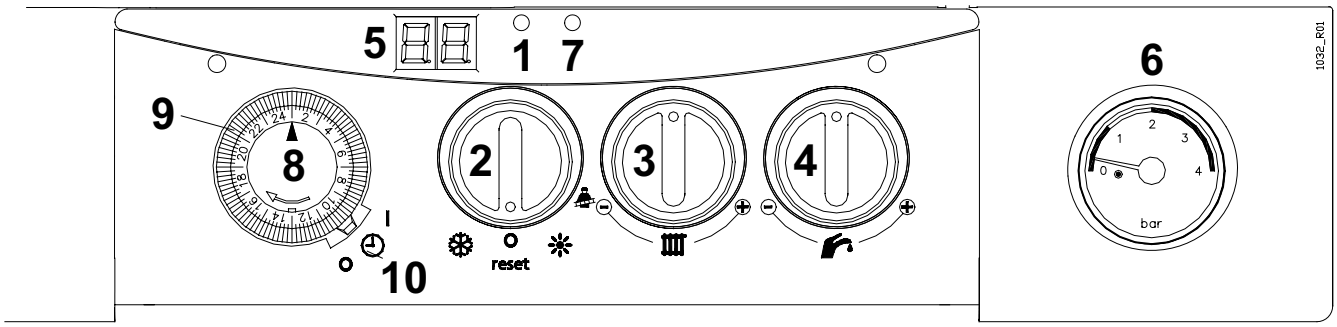

Legend

1 **Operating indicator** ⏻
2 **Operating mode selection**
3 **Heating temperature adjustment**
4 **DHW temperature adjustment**
5 **Display of the temperature / error codes**
6 **Pressure gauge**
7 **Safety lockout indicator** ⚠
8 **Timeclock**
9 **Timeclock toggles**
10 **Timeclock mode selector**

6.2 Commissioning and lighting

- Make sure that:
- the boiler is connected to the electrical supply (the green indicator [1] blinks).
- the gas service cock is open.
- Turn the selector [2] bringing it in the SUMMER ☀ or WINTER ❄ position. The operating indicator [1] on the control panel turns on: the boiler is ready to run.
- Turn the selector [2] to modify the operating mode of the boiler:

❄	Central heating and domestic hot water
☀	Domestic hot water only
	Installer mode
0 reset	Stand-by and appliance frost protection

6.3 To program daily timeclock

Set the current time, by turning the dial [8] clockwise until the current time is shown against the indicator '▲'.

Push in plastic toggles [9] against the time you wish the heating to be off.

The timeclock can operate in three positions: automatic '◷', heating permanently off '0', and heating permanently on '1'.

To select, move the lever [10] to the desired position.

NOTE: In case the electrical supply fails the timeclock will not operate as it has no back-up battery backup. Therefore, it will be necessary to reset the current time once electrical supply is restored.

6.4 Temperature adjustment

6.4.1 Domestic hot water temperature adjustment

- Turn the knob [4] to adjust the domestic hot water max temperature.

6.4.2 Heating temperature adjustment

- Turn the knob [3] to change the heating system temperature.

7 Turn the boiler off

- Turn the selector [2] on the **0 / reset** position (the green indicator [1] blinks).

We advise you to turn off the appliance gas supply if you leave home for a long period.

8 Fault finding

GREEN LED [1]

The green led can be **off, flashing** (slowly or rapidly) or **on**.

OFF: the boiler is electrically disconnected. In these conditions the boiler obviously doesn't work. The Automatic Anti Freezing and Anti Blocking functions can't be activated (prevents damage to boiler during long period of inactivity). The external general switch could be off.

FLASHING (slowly): the boiler has power but the SUMMER/WINTER Selector is in central position (0). The boiler will not provide heating or hot water but the boiler protection systems are operating (Anti Freezing and Anti Blocking functions may ignite the boiler and as such require the gas supply to be open).

FLASHING (rapidly): the Chimneysweep Function (which is reserved for the installer) **is on** by mistake.

Turn it off bringing the SUMMER/WINTER selector on the central position (0) until the green led flashes slowly.

ON: the boiler is on and the SUMMER/WINTER selector is in the SUMMER Position or in the WINTER Position. The boiler will provide heating and hot water on demand.

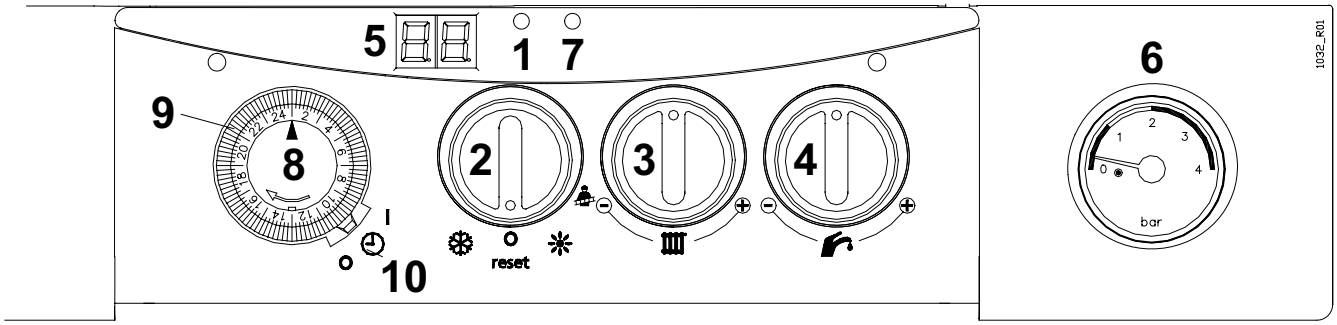

RED LED ⚠ [7] - FAULT CODES AND LOCKOUTS

The red led [7] can be **off**, **flashing** or **on**.

Led OFF: the boiler is **functioninging correctly**.

Led FLASHING: signals a boiler fault. The display [5] will show a fault code:

Fault code "06" - the heating system temperature sensor (inside the boiler) is damaged. Call a Qualified Technician to repair.

Led ON - The display [5] shows a flashing code. Things to try:

Code "01" - If the boiler has **just** been **installed**, or **adjustments** have been made **to the gas pipes**.

If the air-gas mix ratio is incorrect then this will prevent combustion and can force the boiler into a state of lockout. In order to correct the mix you should repeat the ignition process several times with the SUMMER/WINTER Selector on the **0 / reset** position until the red led turns off.

Code "01" - Ignition problems if no work has been carried out.

Ensure that the SUMMER/WINTER selector is on the **0 / reset** position until the red led turns off. If this does not happen or the boiler goes back into lockout please ask your installer to check the following points:

- Check the CO_2 levels of the boiler are correct. Please refer to Technical Data table in the section reserved for installers (in this manual);
- Check the flue outlet for leaks and inspect general condition clearliness. Please refer to "Flue connection" in the section reserved for installers (in this manual).

***Technical Note for the TECHNICIAN**: if the Flame Control Unit is not detecting a flame it could be due to one of the following reasons:*

• the flame has not ignited;

• the flame control unit has become disconnected from the burner.

Code “05” - The boiler is overheating and **the Safety Thermostat has triggered.**

Move the SUMMER/WINTER Selector on the **0 / reset** position until the red led turns off (this may take a while to allow the boiler to cool). Once the led is off move the selector to the desired position (Summer ☀ or Winter ❄). If the boiler locks out again please call the group service for assistance.

Code “05” - The boiler flue is overheating and **the Flue Safety Thermostat has triggered;**

The thermostat must be replaced by the installer. Please try the following process, if it does not work then call group service for assistance.

Move the SUMMER/WINTER Selector on the **0 / reset** position until the red led turns off (this may take a while to allow the boiler to cool). Once the led is off move the selector to the desired position (Summer ☀ or Winter ❄). If the boiler locks out again please call the group service for assistance.

Code “21” - You have insufficient water pressure (0.5 bar or lower).

Repressurise the system to the optimum pressure of between **1-1,5 bar (cold)** by following the procedure outlined in the paragraph “Commissioning” in the section reserved for installers (in this manual).

If a system continues to lose pressure it would suggest a system leak and the system should be inspected for water loss. Also check that all radiators bleed points are closed or have not been recently opened before checking the system.

9 Frost protection

9.1 Boiler frost protection

In case of frost risk, do as follows:

- Make sure the boiler is supplied with electrical power and gas.
- Turn the selector [2] on the **0 / reset** position (the green indicator ⏻ [1] blinks).

The frost protection system operates the boiler as soon as the temperature in the heating circuit is under 5°C. The boiler stops as soon as the water temperature in the heating circuit reaches 30°C.

9.2 Frost protection activation

- If you leave home for a few days, select the minimum heating temperature on the control panel of the boiler and just decrease the setpoint temperature on your room thermostat.
- If you leave home for a long period, see chapter “Draining of the appliance” in the section reserved for installers (in this manual).

10 Maintenance/After Sales Service

Please note that an incorrectly serviced appliance can affect the safety of the appliance and can lead to injury.

To ensure the continued efficient and safe operation of the appliance it is recommended that it is checked and serviced as necessary at regular intervals. The frequency of servicing will depend upon the particular installation conditions and usage, refer to guarantee registration.

If this appliance is installed in a rented property there is a duty of care imposed on the owner of the property by the current issue of the Gas Safety (Installation and Use) Regulations, Section 35. Servicing/ maintenance should be carried out by a competent person in accordance with the rules in force in the countries of destination. To obtain service, please call your installer or Saunier Duval service team.

Index

1 Comments on the instructions 12

2 Appliance description 12

2.1 Data label 12
2.2 Mandatory WARNING for EEC countries 12
2.3 Block diagram 13

3 Appliance location 13

4 Safety instructions and regulations 14

4.1 Safety instructions 14
4.2 Regulations 15

5 Appliance installation 16

5.1 Recommendations before mounting 16
5.2 Dimensions 17
5.3 List of delivered equipment 18
5.4 Fixing to the wall 18
5.5 Gas and water connection 19
5.6 Connection to the condensate trap 20
5.7 Flue connection 22
5.7.1 Flue restrictor 22
5.7.2 Horizontal concentric flue Ø 60/100 (C13 type installation) 24
5.7.3 Vertical concentric flue Ø 60/100 (C33 type installation) 24
5.7.4 Twin flue 2 x Ø 80 (C53 type installation) 25
5.8 Electrical connection 25
5.8.1 External controls 26
5.9 Wiring diagram 28

6 Commissioning 29

7 Specific adjustments 29

7.1 Pump speed 29
7.2 Personalizing the boiler's functioning 31

8 Draining of the appliance 32

8.1 Heating circuit 32

9 Gas valve / Output power settings 33
9.1 Gas valve setting 33
9.2 Central heating output setting 34
9.3 Domestic hot water flow rate setting 34
9.4 Slow opening setting 35
9.5 Changing gas type 35

10 Fault finding 35

11 Control / Commissioning 38

12 User information 38

13 Spare parts 38

14 Maintenance 39
14.1 Casing 39
14.2 Combustion chamber 39
14.3 Burner 39
14.4 Heat exchanger 39
14.5 Reassembly of parts removed for servicing 40
14.6 Flue system 40
14.7 Operation of fan 40

15 Replacement of parts 40
15.1 To replace fan 40
15.2 To replace air pressure switch 40
15.3 To replace pump 41
15.4 To replace gas valve 41
15.5 To replace domestic heat exchanger 42
15.6 To replace thermistor 42
15.7 To replace overheat thermostat 42

16 Technical data 43
16.1 Burner pressure tables 44

17 Boiler schematic 45

1 Comments on the instructions

- Please give all of the instructions to the user. The user shall keep them for future reference.

We accept no liability in case of damage due to the non-compliance of the instruction manual.

2 Appliance description

2.1 Data label

The data label certifies the origin where the product was manufactured and the country for which it is intended.
Warning! The appliance shall only be used with the gas types indicated on the data label.

2.2 Mandatory WARNING for EEC countries

This appliance is designed, approved and inspected to meet the requirements of the intended market. The data label indicates where the product was manufactured and the country for which it is intended.

This appliance meets the requirements of Statutory Instrument, No. 3083 The Appliance (Efficiency) Regulations, and therefore is deemed to meet the requirements of Directive 92/42/EEC on the efficiency requirements for new hot water appliances fired with liquid or gaseous fuels.

Type test for purposes of Regulation 5 certified by: Notified body 0063. Product/ production certified by: Notified body 0086.

The CE mark on this appliance shows compliance with:

- Directive 90/396/EEC on the approximation of the laws of the Member States relating to appliances burning gaseous fuels.
- Directive 73/23/EEC on the harmonisation of the Laws of the Member States relating to electrical equipment designed for use within certain voltage limits.
- Directive 89/336/EEC on the approximation of the Laws of the Member States relating to electromagnetic compatibility.

IMPORTANT. With regards to the Manual Handling Operations, 1992 Regulations, the following lift operations are recommended as the appliance weight exceeds a one-man lift.

- Clear the route before attempting the lift.
- Ensure safe lifting techniques are used - keep back straight - bend using legs.
- Keep load as close to body as possible.
- Do not twist - reposition feet instead.
- If two persons performing lift, ensure co-ordinated movements during lift.
- Always use assistance if required.

Manufacturer's instructions must not be taken as overriding statutory requirements. Reference in these instructions to British standards and statutory regulations/ requirements apply only to the United Kingdom. For Ireland the current edition of I.S.813 «Domestic Gas Installations» must be used.

This appliance certificated to the current issue of EN 483: 2000 for performance and safety. It is important that no alteration is made to the appliance, without permission, in writing, from Saunier Duval. Any alteration that is not approved by Saunier Duval could invalidate the warranty and could also infringe the current issue of the Statutory Requirements.

2.3 Block diagram

1 Drain valve
2 Pressure gauge / thermometer
4 By-pass
5 Pump
6 Heating system safety valve 3 bar
7 Expansion vessel
8 Overheat thermostat
9 Condense syphonic trap
10 Automatic air vent
11 Recuperator
12 Flue overheat safety thermostat
13 Air pressure switch
14 Fan
15 Flue hood
16 Primary heat exchanger
17 Burner
18 Thermistor
19 Hydraulic 3-way valve
20 Water valve
21 Domestic plate to plate heat exchanger
22 Gas valve
23 low pressure sensor

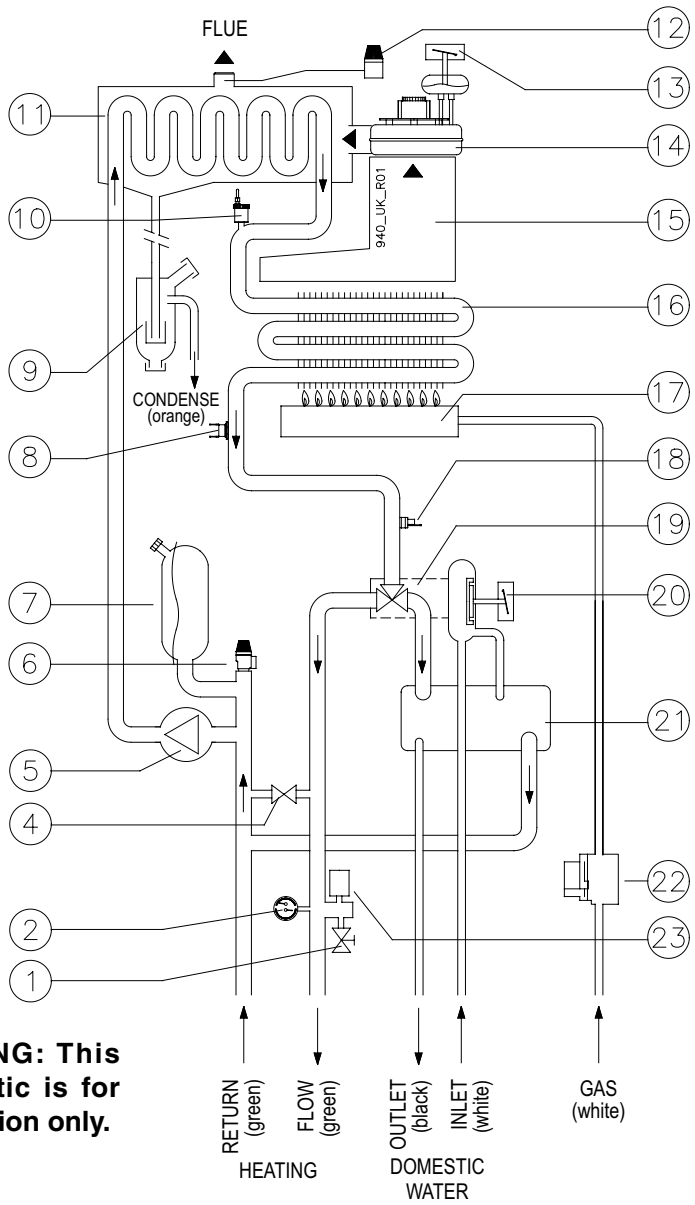

WARNING: This schematic is for information only.

3 Appliance location

- This appliance is not suitable for outdoor installation.
- This appliance may be installed in any room, although particular attention is drawn to the installation of an appliance in a room containing a bath or shower where reference must be made to the relevant requirements. In GB this is the current I.E.E. WIRING REGULATIONS and BUILDING REGULATIONS.
- In IE reference should be made to the current edition of I.S.813 «Domestic Gas Installations» and the current ETCI rules.
- Make sure you keep the minimum clearances to ensure total accessibility for servicing. Top: 150 mm; bottom: 200 mm; side: 5 mm.
- The appliance must be mounted on a flat wall, which is sufficiently robust to take its weight.

- The appliance is room sealed, so when it is installed in a room or space, a permanent air vent is not required.
- Do not install the appliance above another appliance that could damage it (for example, above a cooker that might emit steam or grease) or in a room, which has a lot of dust in the atmosphere which is corrosive.

4 Safety instructions and regulations

This appliance is tested and certificated for safety and performance. It is, therefore, important that no alteration is made to the appliance, without permission, in writing, from Saunier Duval.
Any alteration not approved by Saunier Duval, could invalidate the certification, appliance warranty and may also infringe the current issue of the statutory requirements.

4.1 Safety instructions

If the gas pressure at the input of the appliance is outside the range specified, you shall not start the appliance. If the cause of the problem cannot be found nor solved, please contact the Gas Utility company.

Warning! Incorrect installation can cause electric shock or appliance damage.

- When making the connections, locate the sealing washers properly so as to avoid any gas or water leakage.
- Never use a wire brush or stiff-bristle scrubbing brush to clean the heat exchanger as this could damage the appliance.
- Under no circumstances must the User interfere with or adjust sealed parts.

Under Section 6 of The Health and Safety at Work Act 1974, we are required to provide information on substances hazardous to health.
The adhesives and sealants used in this appliance are cured and give no known hazard in this state.

In the event of the appliance overheating the safety devices will cause a safety shutdown. If this happens, call your installation/servicing company.

Warning! This appliance must be earthed. This appliance must be wired in accordance with these instructions. Any fault arising from incorrect wiring cannot be put right under the terms of the Saunier Duval guarantee.

The following safety instructions must be imperatively followed during the maintenance and the replacement of spare parts.

- Stop the appliance (see chapter “Turn the boiler off” in the “Instructions for use” section, in this manual).
- Deactivate the appliance from the mains power supply with the socket or the double-pole switch (with a minimum gap of 3mm for both poles).
- Turn off the gas control valve.
- Close the shut off valves located on the connection sockets.
- Drain the appliance when you want to change the hydraulic parts of the appliance.
- Let the appliance cool down before undertaking any maintenance operation.
- Protect all the electrical components from water when you achieve any operations.
- Use only new O-rings and gaskets.

- After having carried out work on the gas carrying components check that they are correctly fitted and sealed by checking for leaks.
- When the work is complete check the boiler operates correctly.

4.2 Regulations

When installing and commissioning the appliance, the regulations below shall be observed in their current version:

In your own interests and that of safety, it is the Law that ALL gas appliances must be installed by a competent person only, in accordance with the current issue of the above regulations.

In GB the installation of the appliance must be carried out by a competent person as described in the following regulations:

- The manufacturer's instructions supplied.
- The Gas Safety (Installation and Use) Regulations.
- The appropriate Buildings Regulations either The Building Regulations, The Building Regulations (Scotland), The Building Regulations (Northern Ireland).
- The Water Fittings Regulations or Water byelaws in Scotland.
- The Health and Safety at Work Act, Control of Substances Hazardous to Health (COSHH).
- The Current I.E.E. Wiring Regulations.

Where no specific instructions are given, reference should be made to the relevant British Standard Code of Practice.
In IE, the installation must be carried out by a competent person and installed in accordance with the current edition of I.S.813 «Domestic Gas Installations», the current Building Regulations and reference should be made to the current ETCI rules for Electrical Installation.

In GB the following Codes of Practice apply: BS4814, BS6798, BS5440 Part 1 and 2, BS5546 Part 1, BS5449, BS6891, BS6700, BS7074 Part 1 and 2, BS7593, BS7671.
In IE: I.S.813, BS5546, BS 5449, BS 7074, BS 7593.

Where no British Standard exists, materials and equipment should be fit for their purpose and of suitable quality and workmanship. The installation of this appliance must be carried out by a competent person in accordance the rules in force in the countries of destination. Manufacturer's instructions must not be taken as overriding statutory requirements.

If the appliance is to be installed in a timber frame building it should be fitted in accordance with the Institute of Gas Engineers document IGE/UP/7/1998. If in doubt seek advice from the local gas undertaking or Saunier Duval.

The installation is subject to building regulation approval, notify the Local Authority of intention to install.

5 Appliance installation

All the dimensions in this chapter are expressed in mm.

5.1 Recommendations before mounting

5.1.1 Domestic hot water circuit design

The circuit should be designed to avoid any unnecessary flow losses (decrease the number of elbows).

The boiler will operate with a minimum supply pressure but with a low flow. Optimum performance will be achieved with a pressure of 1 bar (cold).

5.1.2 Heating circuit design

SEMIA CONDENS boilers can be used for any kind of installation: serial or derivated double tube, single tube, under floor heating, etc...
Heating surfaces can be made up with heaters, convectors or unit heaters.

Warning: If the materials used are of a different type, some corrosion can occur. In that case, we advise you to add an inhibitor to the heating circuit water (according to the manufacturer's recommendations) that could avoid gas production and oxide formation.

The pipework sections should be fixed by using the following flow/pressure curve (see chapter "Heating circuit adjustment"). The system will be calculated according to the flow corresponding to the power that is really required without taking into account the maximum power that the boiler can supply. Nevertheless, we advise you to have a flow big enough so that the temperature difference between outgoing and return is under or equal to 20°C. The minimum flow rate is indicated in the chapter "Technical Data" at the end of this instruction manual.

The piping route should be designed in such a way that it avoids any air locks and make purging of gas from the system easier. Bleeders should be placed at each high point of the system as well as on any radiators.

Total water volume accepted by the heating circuit depends, amongst other things, on the cold static load. The expansion tank fitted in the boiler is delivered set in plant (see chapter "Technical Data" at the end of this instruction manual). At commissioning, it is possible to change this pressure in case of a larger static load. We advise you to provide a drain valve at the lowest point of the system.

If thermostatic radiator valves are used, we advise you not to fit in a room where a room thermostat is fitted.

- In case of an old installation, the system should be flushed. See section 5.1.4.
- If the boiler is not immediately set, protect all the pipe fittings so as to avoid that any plaster element or paint could impede the connection.

5.1.3 Water treatment

In the case of an existing installation, it is Essential that prior to installing the new boiler the system is thoroughly flushed. For optimum performance after installation of a new system, the boiler and its associated central heating system should also be flushed.
Flushing should be carried out in accordance with BS7593: 1992 using a cleanser such as Sentinel X300 or X400, Fernox Superfloc or Salamander corrosion guard cleaner.

For long-term corrosion protection, after flushing, an inhibitor suitable for stainless steel heat exchangers should be used, refer to the current issue of BS 5449 and BS 7593 on the use of inhibitors in central heating systems. Examples are Sentinel X100 Fernox or Salamander corrosion guard inhibitor.

5.2 Dimensions

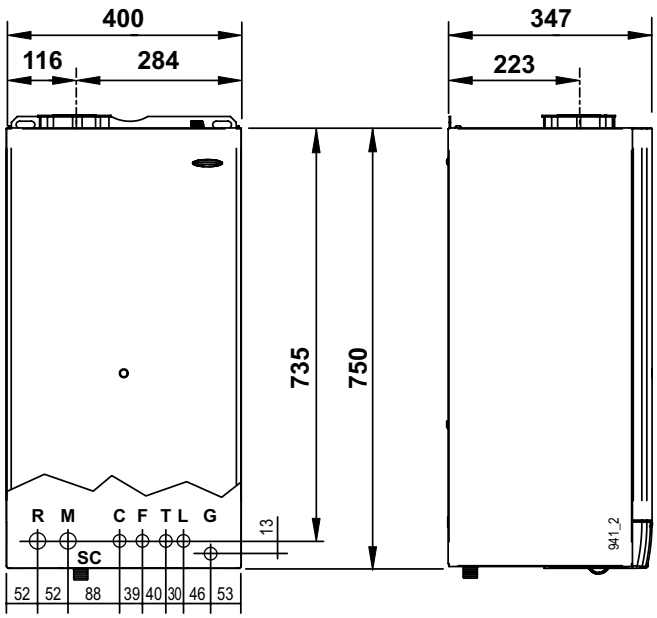

R	Heating return (green)	**F**	Cold water inlet (white)
M	Heating flow (green)	**T**	Room thermostat
SC	Condense outlet (orange) (flexible pipe)	**L**	Electrical power supply
C	Hot water outlet (black)	**G**	Gas (white)

CONNECTIONS FOR FLUE

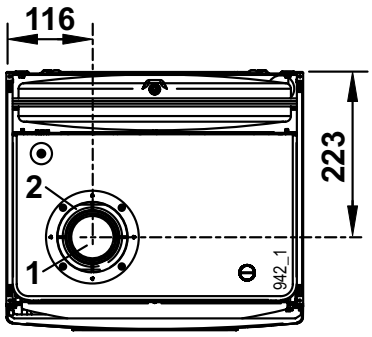

1	Flue products outlet
2	Air inlet for concentric system

5.3 List of delivered equipment

The boiler is delivered in two packages:

- **The boiler**
- **One isolating valve pack:**
  - 2 heating isolating valves
  - 1 domestic cold water isolating valves
  - 1 gas isolating valves
- **One safety discharge pipe pack:**
  - 1 safety discharge pipe
  - 1 1/2 in. gasket
- **One installation and documentation pack:**
  - 1 user and installation manual
  - 1 guarantee envelope
  - 1 gas conversion instructions sheet
  - 1 log book
  - 1 condense drain pipe
  - a set of 1/2 in. gaskets
  - a set of 3/4 in. gaskets
- **One pipe pack:**
  - 2 central heating pipes
  - 2 gas/cold water pipes
  - 1 hot water pipe
  - a set of 1/2 in. gaskets
  - a set of 3/4 in. gaskets
  - 1 wall template
  - 1 hanging bracket

The flue is supplied separatly and will depend upon the configuration of the installation.

5.4 Fixing to the wall

- Make sure the material you use fits those of the appliance.
- Chose the location of the appliance. See chapter “Appliance location”.

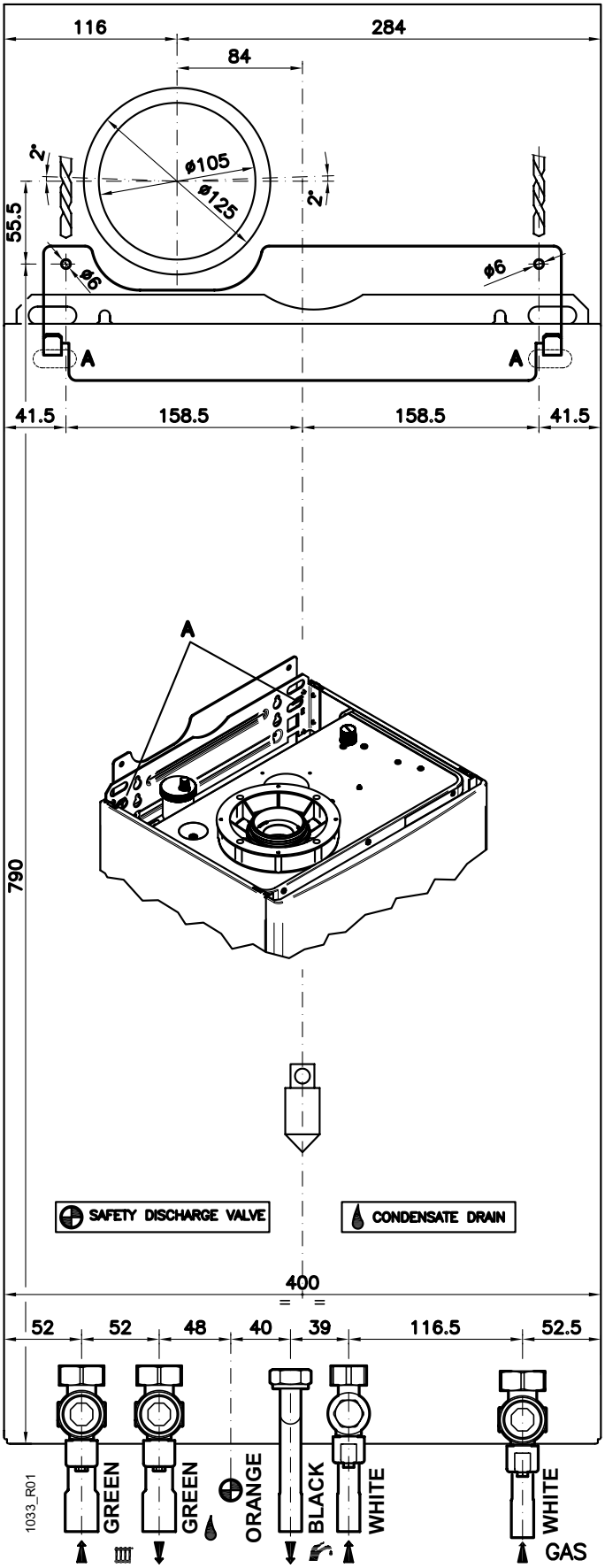

- The hanging bracket will be adapted to the features of the bearing wall and will have to take into account the weight of the boiler (please refer to Technical Data table in this manual);.
- Drill the holes for the fixing screws in accordance to the diagram below and to the size of the wall template delivered with the appliance.
- Place the boiler above the hanging bracket.
- Slowly lower the boiler.
- Set the seals on the different pipe fittings.
- Make connections to boiler, gas, water and heating cocks with the tube assemblies supplied in piping pack.

5.5 Gas and water connection

- Before undertaking any operation, carefully clean the pipes with an appropriate product in order to remove impurities such as filings, welds, different oils and greases that may be present. These foreign bodies may enter the boiler and disrupt the operation.
- Do not use any solvents that could damage the heating circuit.
- Do not brase the nozzles set on place: this operation could damage the seals and the taps tightness.
- Only use the genuine seals delivered with the appliance.
- Check that there is no leakage. Repair if need be.

The heating safety discharge valve must be connected, using not less than 15mm o.d. pipe, to discharge, in a visible position, outside the building, facing downwards, preferably over a drain.

The pipe from the safety discharge valve must not discharge above an entrance, window or any type of public access area.

The pipe must have a continuous fall and be routed to a position so that any discharge of water, possibly boiling, or steam cannot create any danger to persons, damage to property or external electrical components and wiring.

To ease future servicing it is advisable to use a compression type fitting to extend the safety discharge valve tube.

Warning! Relief valve connections should not be used for any other purpose.

5.6 Connection to the condensate trap

- Connect the flexible pipe to a discharge system leading to the sewer in compliance with the instructions below:
- Use the condensate drain flexible connection pipe supplied.
- Ensure there is a conbinual fall of 2.5° (44 mm/m).
- Do not let the condensate drain flexible connection fall into the trap.
- Do not use copper pipes.

Important notice:
The float in the condensate trap also ensures fume tightness. Therefore, it is not necessary to add water in the condensate trap.

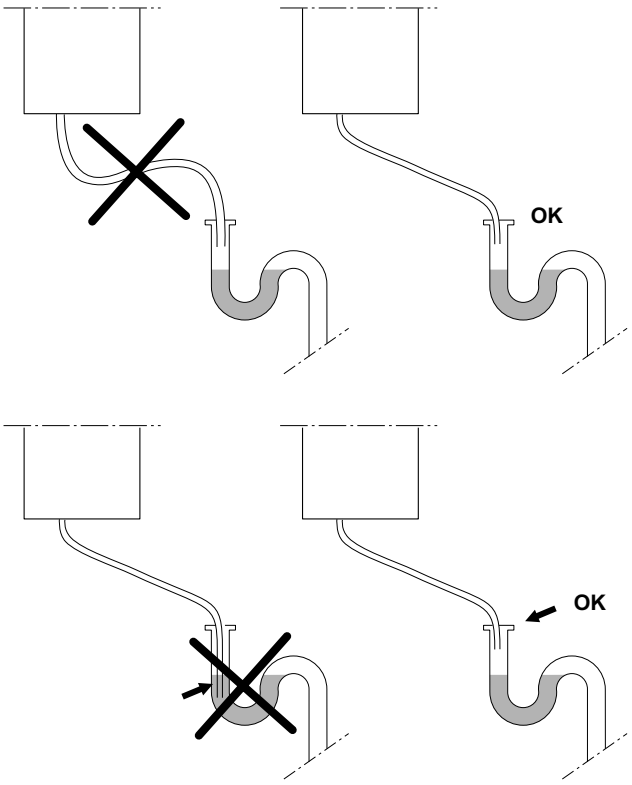

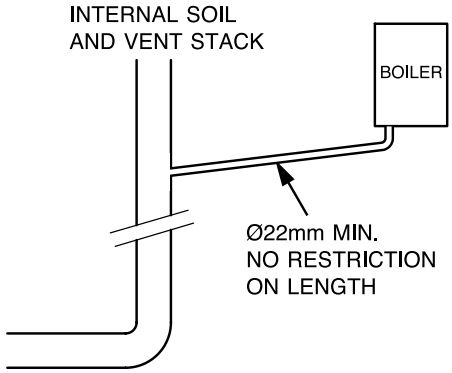

Internal Soil and Vent Pipe

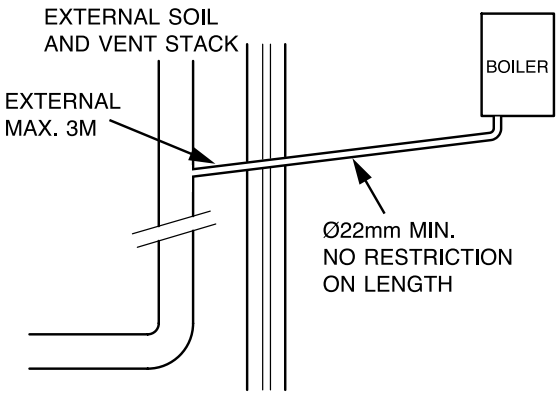

External Soil and Vent Pipe or Rainwater Pipe

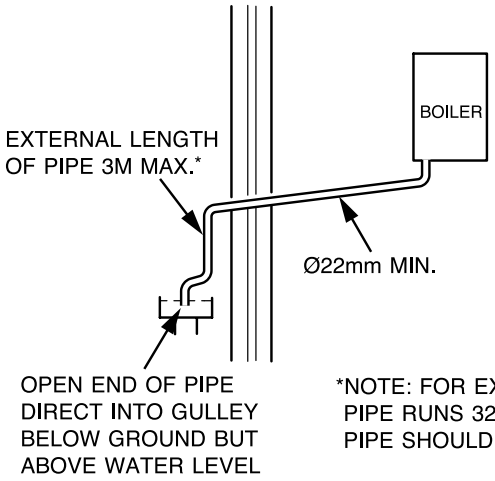

*NOTE: FOR EXTENDED PIPE RUNS 32mm DIA. PIPE SHOULD BE USED.

External Termination to a Gulley or Hopper

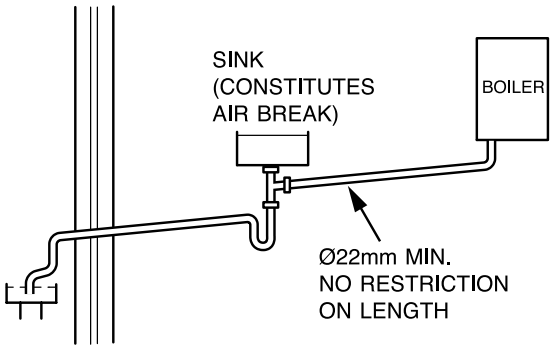

Internal Termination into Combined Sink Waste

1041_R00

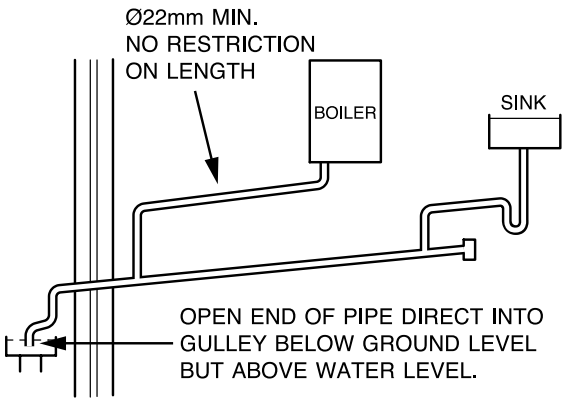

Internal Termination Downstream of Sink Waste

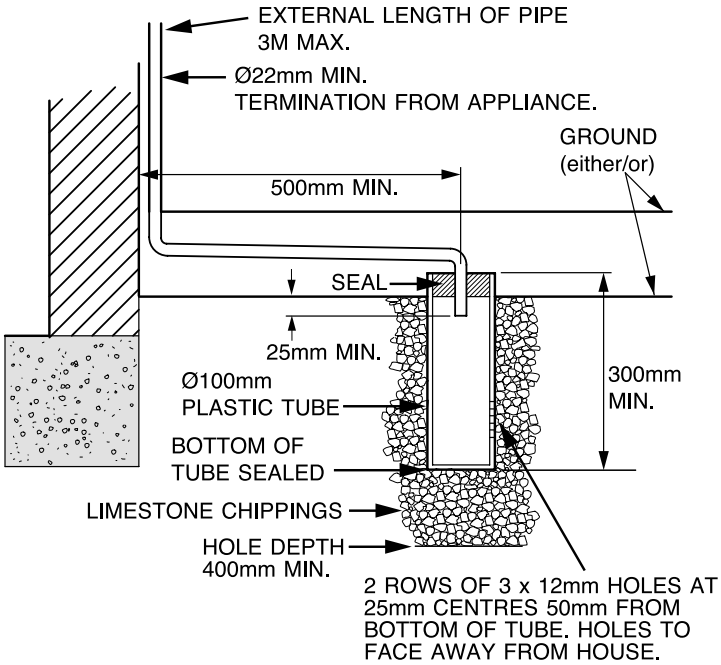

External Termination into Soakaway

NOTE: PIPEWORK SHOULD ALWAYS FALL AWAY FROM BOILER BY AT LEAST 2.5° 44mm FOR EVERY 1M.

5.7 Flue connection

Different flue outlet configurations can be carried out.

- Consult your supplier for more information about the other possibilities and associated accessories.

Warning! You can only use flue accessories approved for the SEMIA CONDENS.

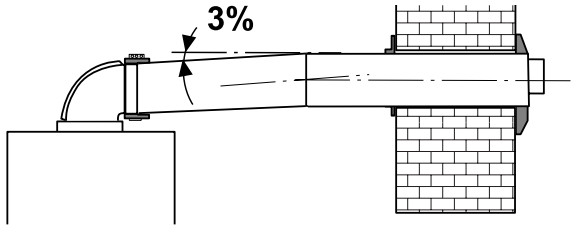

Saunier Duval's horizontal flue automatically provides a 3° angle that enables the return of the condensates to the appliance.

- Whatever the kind of flue system chosen, observe the minimum distances indicated in the chart on the next page to position the flue terminals.

5.7.1 Flue restrictor

Depending on the length of the flue system, it may be necessary to install the flue restrictor "D". The length of the system is specified for each flue configuration.

Then, install the plastic adaptor "A".

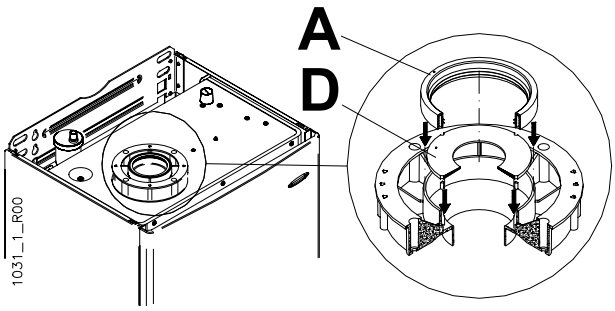

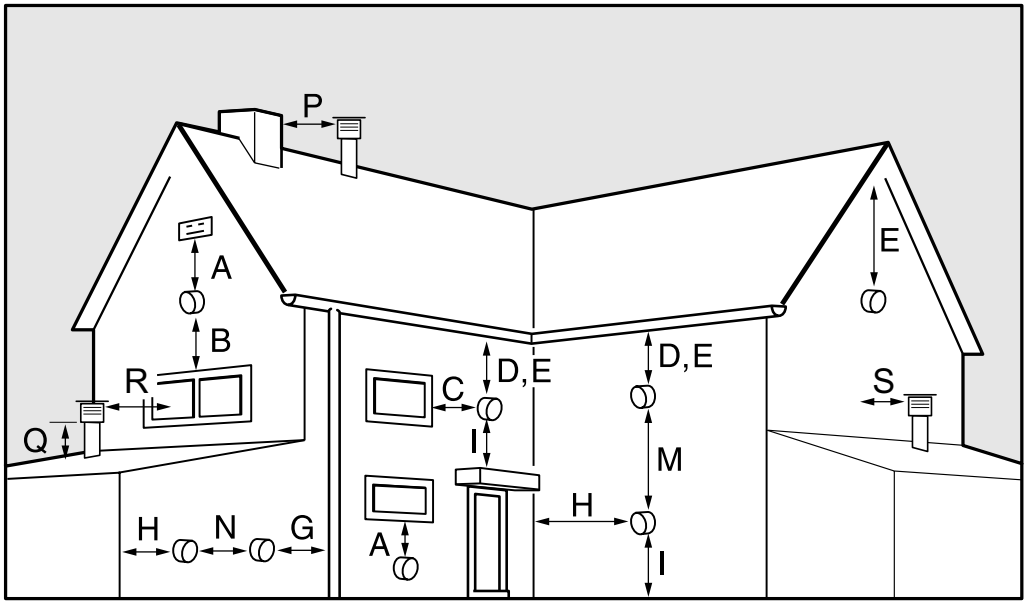

UNDER CAR PORT etc.

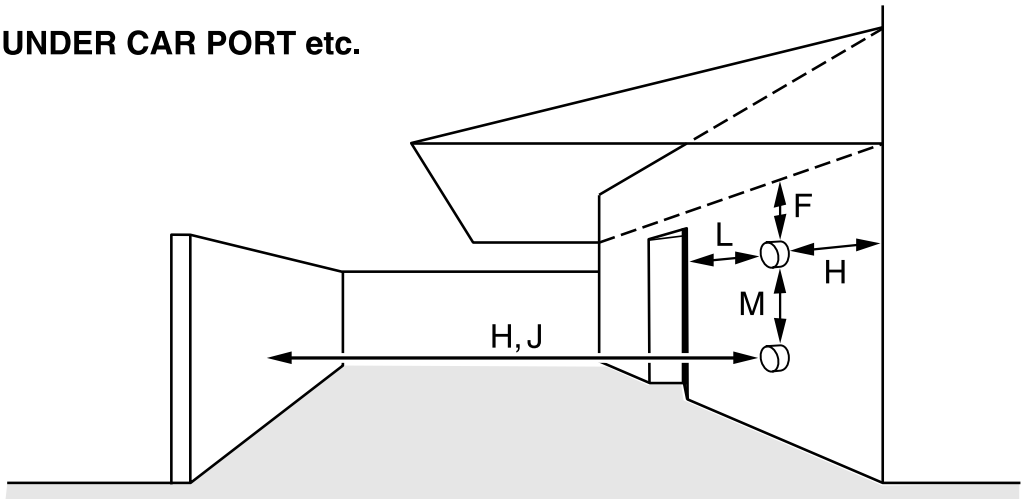

Position	Position of the flue terminal	mm
Horizontal flues		
A	directly below an opening, air brick, opening windows	300
B	above an opening, air brick, opening windows	300
C	horizontally to an opening, air brick, opening windows	300
D	below gutter, drain/soil pipe	25
E	below eaves	25
F	below a balcony or car port	25
G	from vertical drain pipes and soil pipes	25
H	from internal/external corners	25
H*	to a boundary alongside the terminal	300
I	above adjacent ground or balcony level	300
J	from surface or a boundary facing the terminal	600
K	facing terminals	1200
L	from opening (door/ window) in car port into dwelling	1200
M	vertical from a terminal	1500
N	horizontally from a terminal	300
Vertical flues		
P	from another terminal	600
Q	above roof level	300
R	from adjacent opening window	1000
S	from adjacent wall to flue	300

H*: This dimension comply with the building regulations, but it may need to be increased to avoid wall staining and nusance from pluming depending on site conditions.

5.7.2 Horizontal concentric flue Ø 60/100 (C13 type installation)

IMPORTANT: turn the coaxial socket 45° (as shown in the picture) when horizontal concentric flue Ø 60/100 is used.

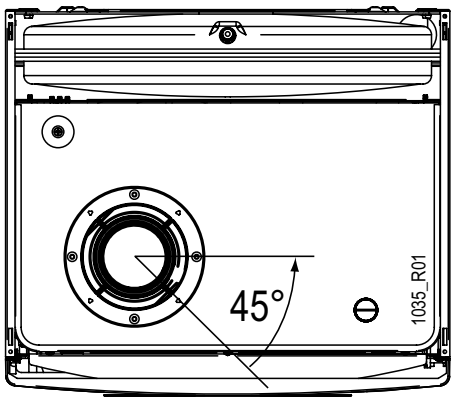

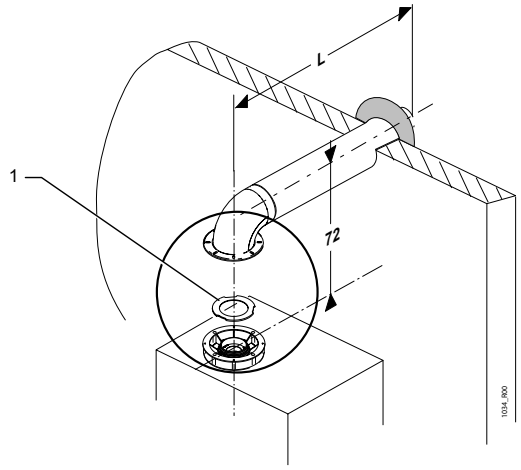

Legend
1 Gasket

Maximum flue index: 150 Pa

This value is reached with the length of the maximum duct (L) + 1 90° elbow.

Flue model	Boiler model	Max. length L	Restrictor if length
Ø 60/100 horizontal	F24 E	4 m	< 2 m
	F30 E	3 m	< 1 m

A Plume mangement kit can be installed at the extremity of the duct.

Every time a 90° elbow is used (or 2 off 45°), the length (L) should be reduced by 1 m.

5.7.3 Vertical concentric flue Ø 60/100 (C33 type installation)

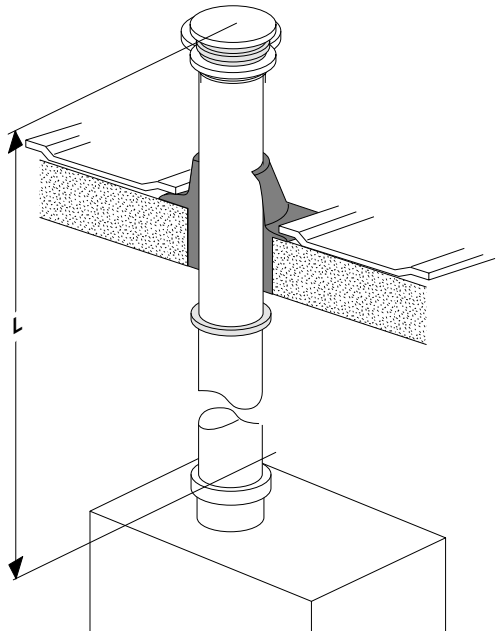

Maximum flue index: 150 Pa

This value is reached with the length of the maximum duct (L) + 1 90° elbow.

Flue model	Boiler model	Max. length L	Restrictor if length
Ø 60/100 vertical	F24 E	5 m	< 2 m
	F30 E	4 m	< 1 m

Every time an extra 90° elbow is used (or 2 off 45°), the length (L) should be reduced at by 1 m.

5.7.4 Twin flue 2 x Ø 80 (C53 type installation)

Warning!

- Any duct that goes through a wall and whose temperature is over 60°C from the room temperature will be thermally insulated at this passage. The insulation will be composed of an appropriate insulating material whose thickness is ≥ 10 mm and thermal conductibility λ ≤ 0.04 W/m.K.

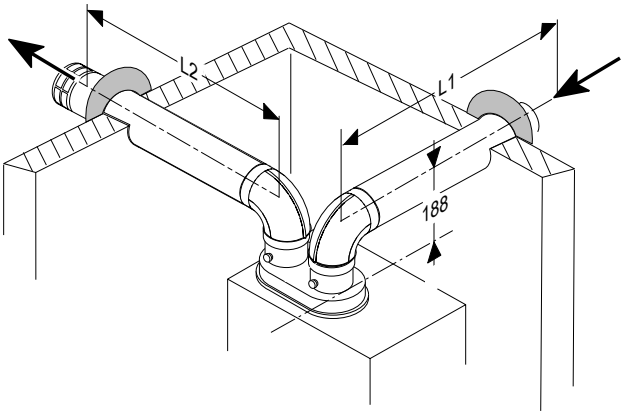

Maximum flue index: 150 Pa

This value is reached with 2 elbows, the separator and the maximum duct length (L1+L2).

Flue model	Boiler model	Max. length L1+L2 (L2)	Restrictor if length L1+L2
Ø 80 twin	F24 E	10 (9) m	always
	F30 E	10 (9) m	always

Every time an extra 90° elbow is used (or 2 off 45°), the length (L) should be reduced by 0.5 m.

For separator correct and wrong positions, refer to the following diagram:

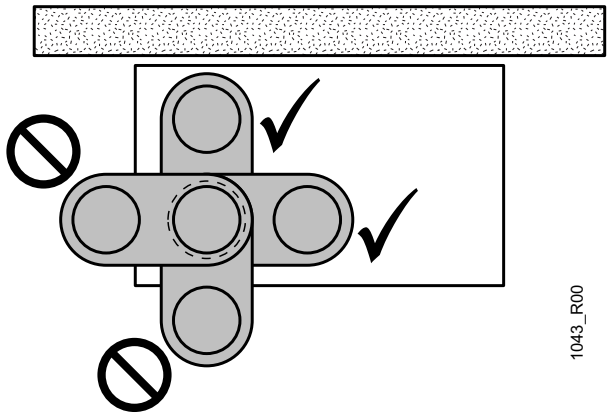

5.8 Electrical connection

Warning! Incorrect installation can cause electric shock or appliance damage.

- Connect the power cable of the boiler to the 230 V single-phase + earth network.
- Observe the phase and neutral connection on the boiler.

Important: A skilled professional should achieve the electrical connection of the appliance.

Isolation should be by a double pole switched fused spur box, with a minimum gap of 3mm for both poles.

The fuse of the PCB must be connected to the neutral.

5.8.1 External controls

The boiler will work for heating **AS DELIVERED** without a room thermostat fitted provided the two wires on the integral external controls lead **REMAIN LINKED TOGETHER**.

ANY EXTERNAL HEATING CONTROL MUST BE POTENTIAL FREE (see Figure 1).

ON NO ACCOUNT MUST ANY ELECTRICAL VOLTAGE BE APPLIED TO EITHER OF THE TERMINALS OF THE WHITE EXTERNAL CONTROLS LEAD

WARNING: This boiler must be wired in accordance with these instructions. Any fault arising from incorrect wiring may invalidate the terms of the guarantee.

1) INTERNAL TIME CLOCK WITH EXTERNAL ROOM THERMOSTAT

If a room thermostat is required it must be connected to the external controls lead as shown in figure 1, using a suitable electrical connection.

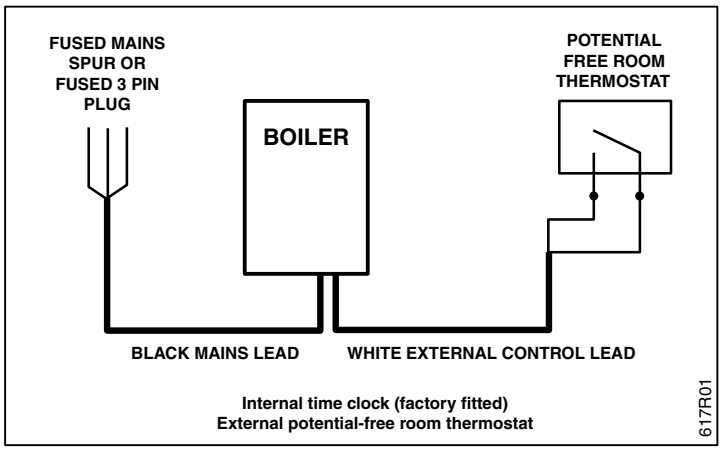

Figure 1

2) CONNECTION WITH EXTERNAL PROGRAMMER

Any eventual external programmer must be connected in series with the room thermostat (see figure 2)

IMPORTANT: the boiler time clock must be linked across (see the REMARK below)

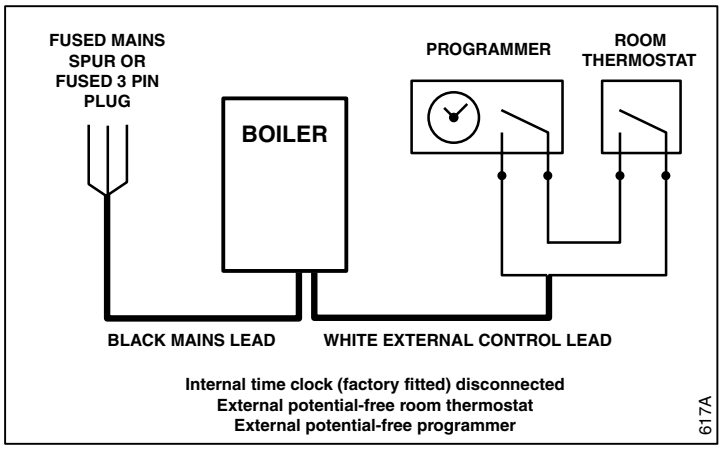

Figure 2

3) CONNECTION WITH EXTERNAL CHRONOTHERMOSTAT

As an alternative solution it is possible to connect a single external chrono-thermostat which makes the double function of a room thermostat and a programmer (see figure 3)

IMPORTANT: the boiler time clock must be linked across (see the REMARK below)

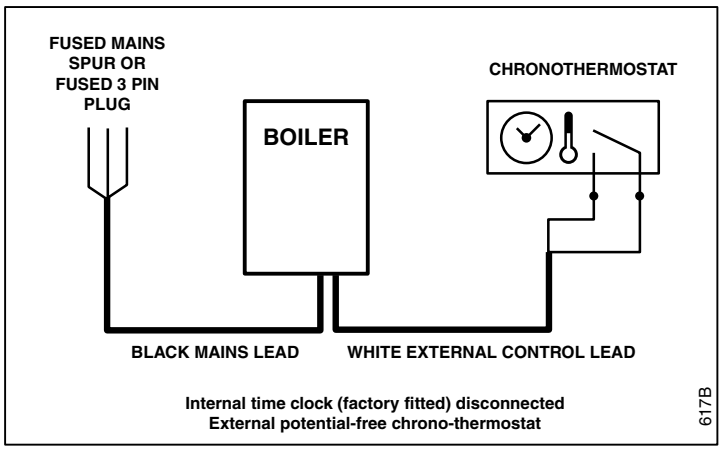

Figure 3

REMARK: In case of installation of an external programmer (see figure 2 and 3) the internal time clock (factory fitted) must be excluded acting in the following way:

1. Remove the front panel of the boiler;
2. Gain access to the PCB;
3. Disconnect the two low voltage wires connected to the clock and make a link by using the “wiring link” supplied in the Documentation Pack as shown in figure 4.

Figure 4

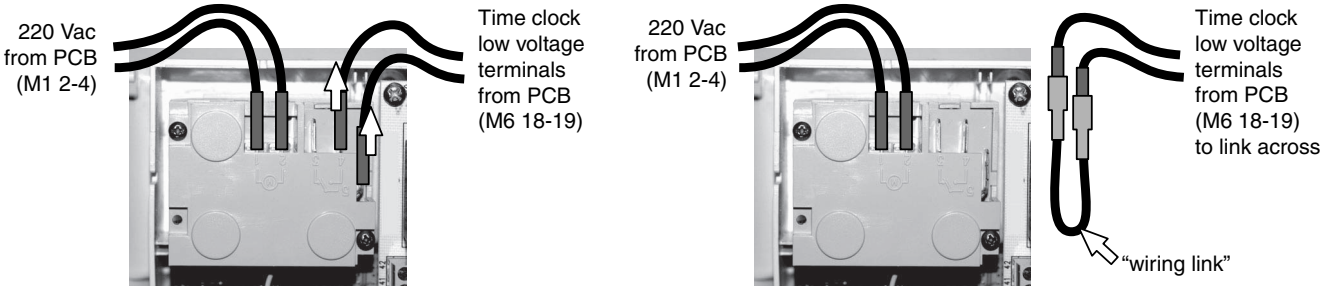

5.9 Wiring diagram

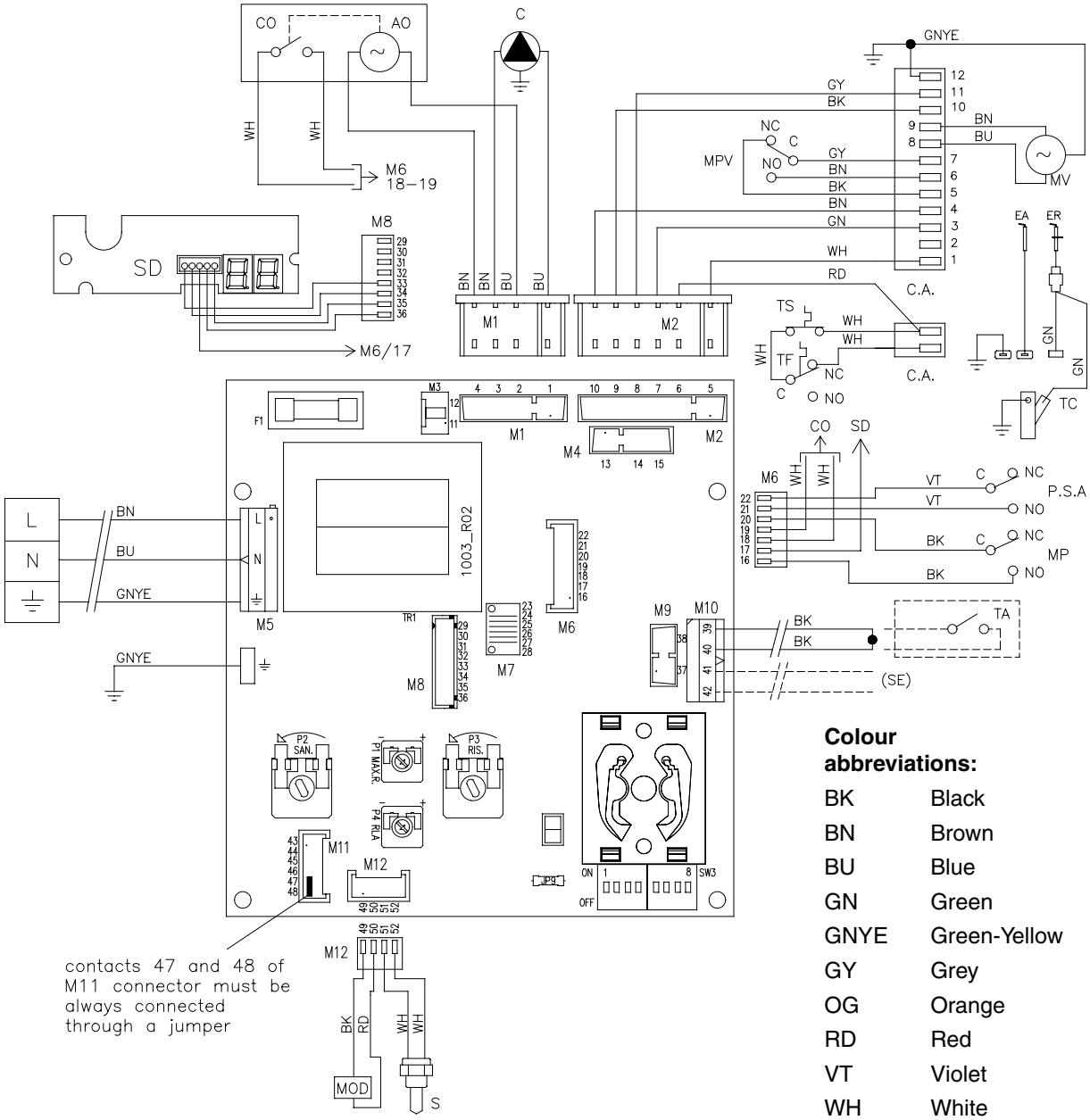

Colour abbreviations:

BK	Black
BN	Brown
BU	Blue
GN	Green
GNYE	Green-Yellow
GY	Grey
OG	Orange
RD	Red
VT	Violet
WH	White

C	Pump
PSA	Loss of water pressure switch (“NO” contact closed = in pressure)
MOD	Modulating coil
S	Thermistor
MP	Water valve microswitch
CA	Ignition and flame control unit
EA	Ignition electrodes
ER	Flame sense electrode
F1	Fuse (2 A)
TA	Voltage-free contact for room Thermo-stat or Cronothermostat
TC	Syphonic condensate trap with overflow sensor
TF	Flue Overheat thermostat
TS	Overheat thermostat
MV	Fan
MPV	Air pressure switch
AO	Timeclock power supply
CO	Timeclock microswitch
SD	Display board
(SE)	External temperature sensor (optional)

6 Commissioning

- Turn the mode selector to the WINTER ❄ position.
  The green operating indicator on the control panel turns on: the boiler is ready to operate.
- Open the isolating valves located on the pipes: they will be placed in the direction of the flow.
- Open the automatic bleeders of the system.
- Open the filling loop valve situated under the boiler until you obtain a 1 bar pressure on the indicator (cold).
- Bleed each radiator to remove the air, re-tighten bleed screws.
- Leave the cap on the pump auto air vent open.
- Flush the domestic hot water system by opening the hot water taps for several minutes.
- Make sure the display indicates a system pressure of between 1 and 2 bars. Re-fill system as necessary.
- Make sure the condense syphon works properly. It ensures the seal only when it's filled with condense (or water).

7 Specific adjustments

7.1 Pump speed

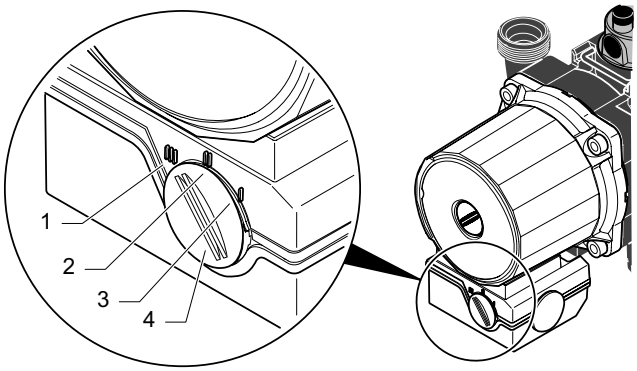

Legend

1 Speed III
2 Speed II
3 Speed I
4 Speed selector of pump

- Turn the selector (4) to choose pump speed I, II or III in relation to the output/ pressure curve (see next page).

Output/pressure curve

Semia Condens F24 E

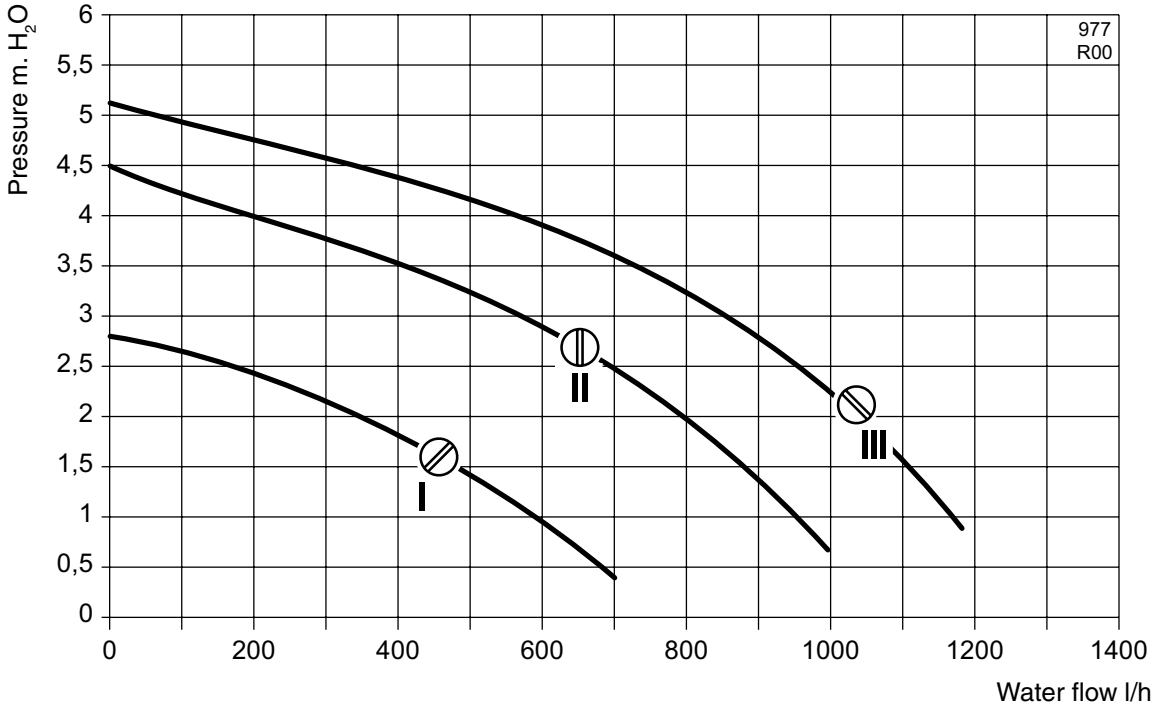

Semia Condens F30 E

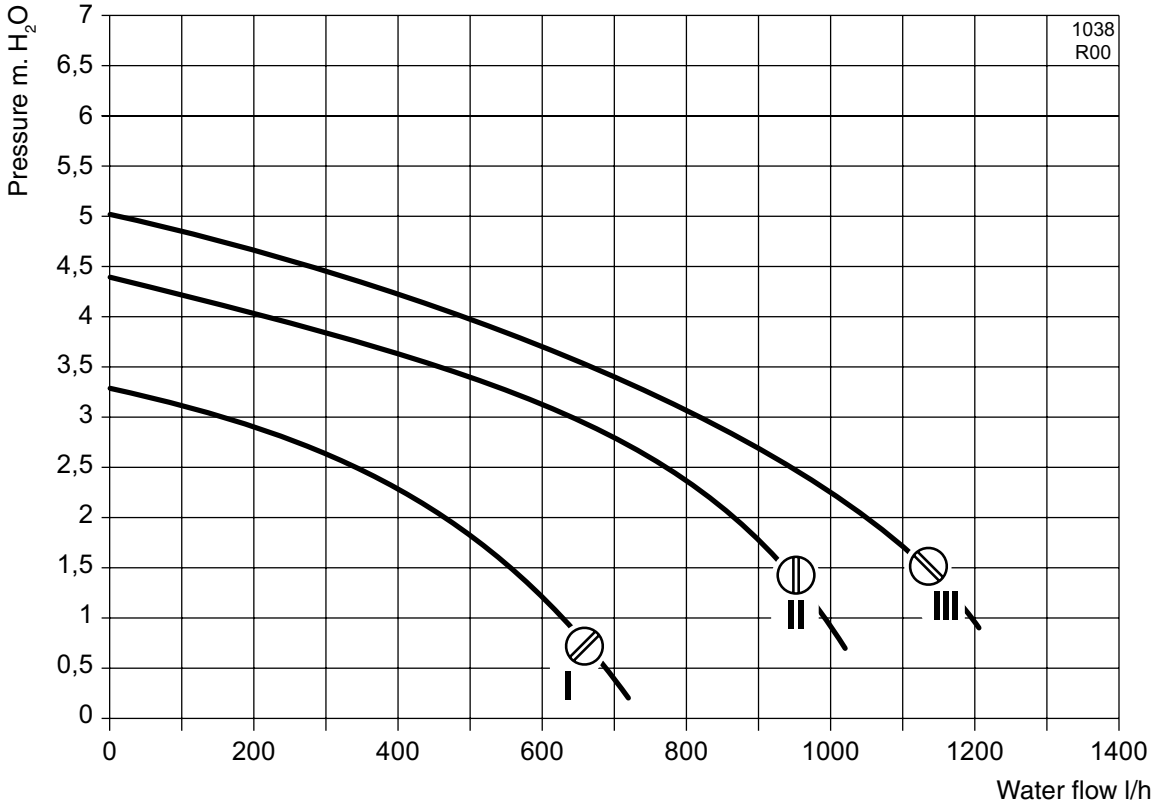

7.2 Personalizing the boiler's functioning

(for professional and After Sales Service use only)

The SEMIA CONDENS models are equipped with a Microprocessor P.C.B., with an array of 8 microswitches (SW3 / 1-8) which allow to make personalizing actions for the boiler's functioning. The firm arrangements are <u>underlined</u>.

Disconnect the power supply before touching the microswitches. Restore the power supply only after you have closed the back cover of the control panel.

Note: the changes to the microswitches have no effect until the boiler is electrically connected.

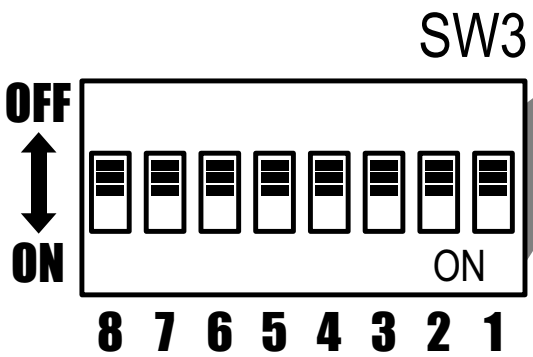

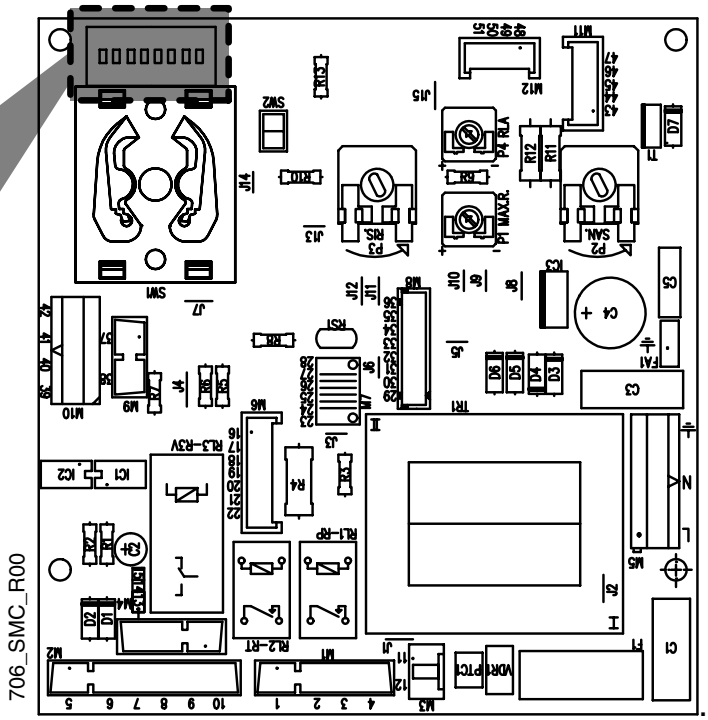

SW3 / 1 – **Natural gas** Functioning = **OFF**. **LPG** Functioning = **ON**. All the operations to change the gas type are described on a separate document provided with the boiler.

SW3 / 2 – Heating Flow Temperature Range: **OFF = normal** (+30°C/+80°C); **ON = reduced** (+25°C/+45°C). The reduced arrangement is used for low temperature systems, but the best results with this type of system are gained with the normal arrangement, using the suitable optional Low Temperature Kit.

SW3 / 3 – Gives a 3 minute delay (anti-cycling) preventing ignition after the heating set temperature has been exceeded. **OFF = Delay ON** (for normal systems or radiators); **ON = Delay OFF** (for fan coil systems).

SW3 / 4 – It determines the extinction and new ignition temperature for DHW: **OFF** = Burner OFF at 75°C and burner ON at 70°C; **ON** = burner OFF at the arranged temperature for DHW (T.SET) + 5°C, and burner ON at T.SET (this arrangement is suggested for water with a high percentage of scale and not treated)

SW3 / 5 and 6 – Pump working mode (during heating):

5 OFF – 6 OFF: intermittent for normal applications (with or without delay, see SW3/3)

5 OFF – 6 ON: always turned off (with outside circulators)

5 ON – 6 Unimportant (OFF or ON): always on (for high thermic inertia systems)

SW3 / 7 and 8 – In SEMIA CONDENS boilers they must be **OFF**.

8 Draining of the appliance

8.1 Heating circuit

- Open the drain cock provided at the system low point.
- Provide an air intake by opening a radiator bleed screw.
- In order to drain only the water in the boiler, first shut off the heating flow and return isolating valves.

9 Gas valve / Output power settings

9.1 Gas valve setting

— Check that the inlet pressure is correct for G20 gas;

Move the Summer/Winter Selector to Chimney Sweep position for at least 3 seconds, then let the selector return to the Summer position. The green led flashes rapidly and the burner ignites at maximum rate for a defined period of time to allow all of the checks to be made. The produced heat is carried off by the heating system;

Wait for at least 10 seconds and check that the pressure corresponds to the highest value indicated in the “Power Pressure” table of the specific model. If it is necessary to correct the pressure, use the following procedure:

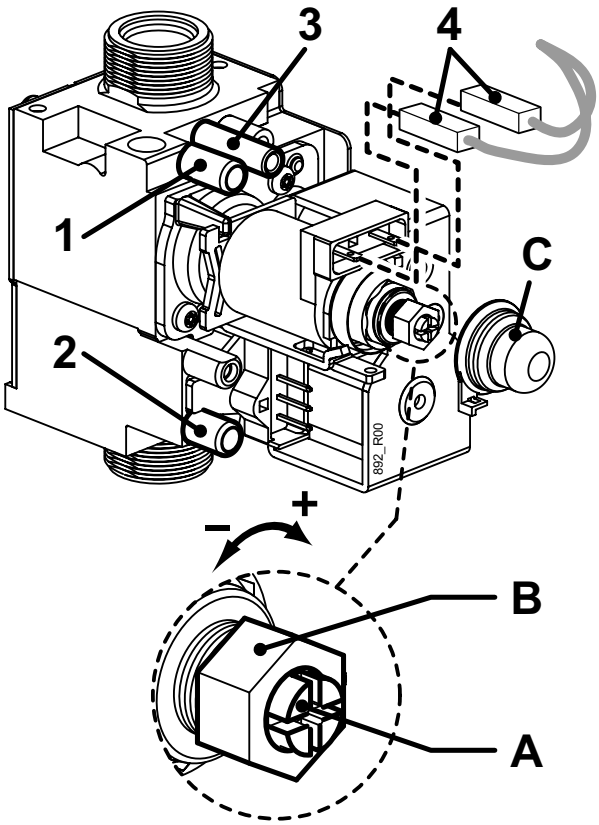

1 = Pressure tapping point for gas outlet

2 = Pressure tapping point for gas inlet

3 = Vent (mod. SE)

- make sure that the modulation coil is energised;
- remove protection cap “C”. Take off the silicon tube from the “VENT” on the gas valve (item 3 in the figure);
- adjust maximum pressure by turning knob “B”, with a 10 mm. spanner. Clockwise to increase, counterclockwise to decrease;
- remove electrical connector on modulation coil;
- keeping knob “B” locked, adjust minimum pressure unscrewing screw “A” very slowly, using a 4 mm screwdriver;
- refit electrical connector on the modulator and check settings;
- turn off the burner by turning the Summer/Winter selector to the central position. The green led flashes slowly.
- Refit the silicon tube in the “VENT” on the gas valve (item 3 in the figure). ATTENTION: after this operation, the value indicated by pressure gauge could decrease due to pressure compensation. This is normal and does not require any adjustment.

Important: lock the adjustment device after any setting operation.

9.2 Central heating output setting

The central heating output can be set in accordance with the system requirements. To adjust the burner pressure, proceed as follows, referring to “Burner pressure tables” paragraph (in this manual):

- Gain access to the PCB, see diagram above.
- Set the ‘summer/winter’ switch to the ‘winter’ position
- Light the burner and check the gas pressure
- Adjust the pressure using potentiometer **P1 MAX.R.** on the PCB.
- Refit cover to controls housing.

CONTROLS HOUSING

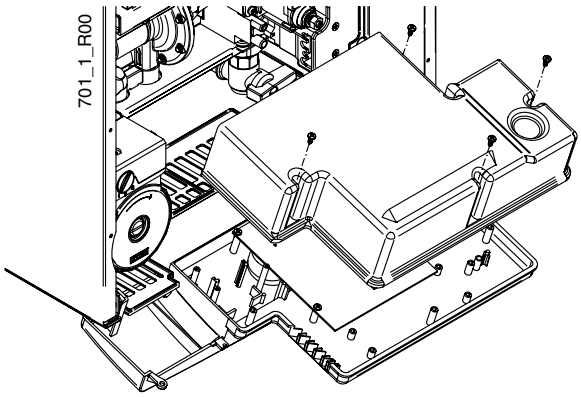

PCB

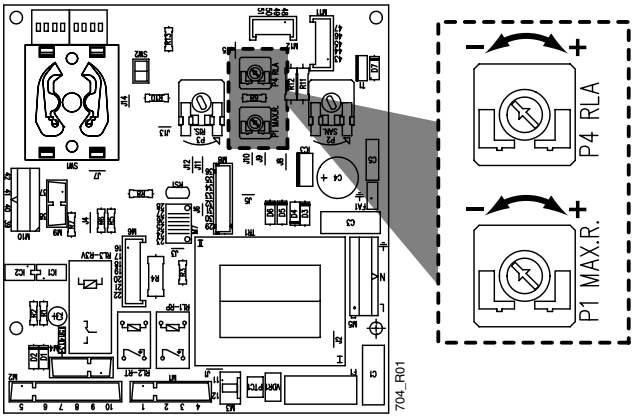

9.3 Domestic hot water flow rate setting

The domestic hot water flow rate is factory set. However, after installation, it may be necessary to adjust the domestic hot water flow rate, proceed as follows:

- Fully open a domestic hot water tap.
- Using a suitable water flow gauge, adjust water flow by turning the adjuster screw on the water valve (see photo).

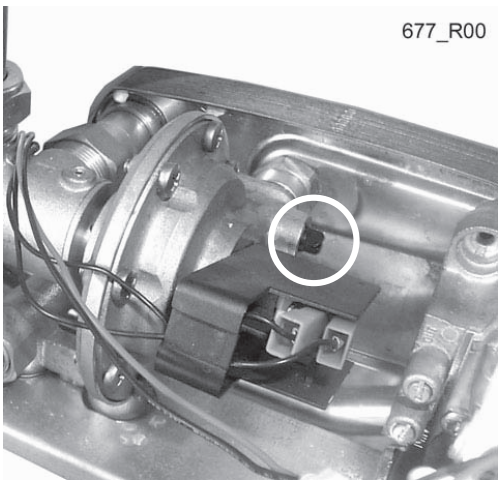

9.4 Slow opening setting

To adjust the slow opening, proceed as follows:

- switch off the boiler;
- Gain access to the PCB as described on previous page

*NOTE: you will have 8 seconds to regulate the slow opening pressure, and after this the burner pressure increases to the highest value. To increase this period of time to 30 seconds, turn the trimmer **P1 MAX.R.** fully anticlockwise (it will be necessary to reset the Max Heating output after this operation).*

- turn on the boiler and open a cold water tap, the burner will light and the slow opening setting pressures can be checked.

The setting pressure is: 7 mbar (71 mm w.g.)

Turn the trimmer **P4 RLA** (clockwise to increase the pressure and anticlockwise to decrease the pressure)

CONTROLS HOUSING

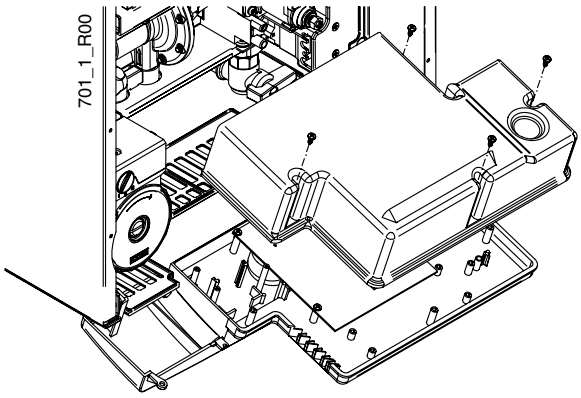

PCB

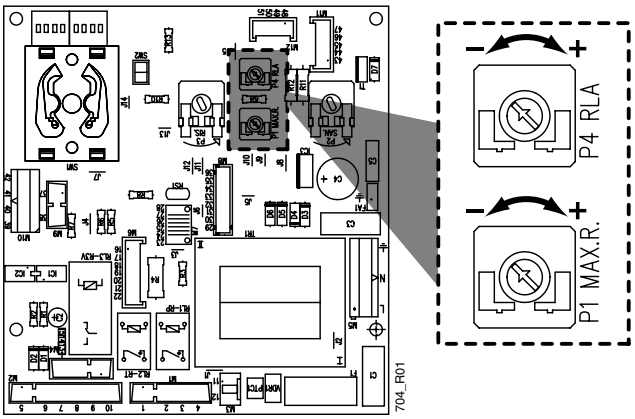

9.5 Changing gas type

All the operations to change the gas type are described on a separate document provided with the boiler.

10 Fault finding

You will find the list of the fault codes in the User Instructions section. Fault finding must be carried out by a skilled professional and if need be by SAUNIER DUVAL's After Sales Service.

Important: a central heating system cannot operate efficiently if it is not filled with water and if the air has not been completely removed. If those requirements are not fulfilled, the boiler could possibli generate unwanted noise.

Installation and servicing instructions strictly reserved for qualified gas installers

Saunier Duval

- To carry out electrical continuity tests across the components make sure:
  a) electrical supply is OFF and the multimeter is set to the Ω position,
  b) the connectors of the component to check are disconnected
- During checks, verify the integrity of the wirings and their correct electrical connections

TURN THE MAIN SELECTOR TO THE POSITION "STAND-BY" ⇔

⇓

a) Is the green led flashing?	NO ⇒	Has the main electrical supply connector 230 V across L and N ?	NO ⇒	- Check the 230 V electrical supply circuit
			YES ⇒	- PCB fuse blown - PCB faulty

YES ⇓

TURN THE MAIN SELECTOR TO "SUMMER", SET THE HOT WATER KNOB AT MAXIMUM, TURN OFF TAPS

⇓

b)Is the green led permanently on?	NO ⇒	- Replace PCB		

YES ⇓

c) Is the red led off?	NO ⇒	Is the red led permanently on ?	NO ⇒	- If the red led is flashing, NTC sensor faulty
			YES ⇒	- Insufficient water pressure (below 0,5 bar) - Low water pressure switch faulty

YES ⇓

d) Does the boiler stay off?	NO ⇒	Is there continuity on DHW flow microswitch ? (PCB-M6 connector, across) terminals 16 and 20)	NO ⇒	- Replace PCB - Check, on the PCB, switches 7 and 8 are off
			YES ⇒	- Domestic hot water flow switch faulty

YES ⇓

TURN ON THE HOT WATER TAP AT THE MAXIMUM FLOW RATE

⇓

e) Does the water come through the tap?	NO ⇒	Is the main water supply turned on?	NO ⇒	- Turn on valves or check the water supply feeding system
			YES ⇒	- Flow rate regulator turned off or boiler inlet filter dirty

YES ⇓

f) Does the boiler start working and the burner ignite after a few seconds?	NO ⇒	Does boiler Lock-out?	NO⇒	- Clean or replace the diaphragm inside domestic water priority valve - If not continuity on PCB-M6 across terminals 16-20, flow switch faulty - PCB faulty - Ignition unit faulty ***If the fan is not running:*** - Air pressure switch faulty, if there is not continuity across C and NC - Fan faulty, if there is 230 V across fan connectors - Ignition unit faulty, if there is not 230 V across fan connectors ***If the fan is running:*** - Air pressure switch tubes disconnected or obstructed - Air pressure switch faulty, if there is not continuity across C and NO - Replace PCB if all the above checks did not produce successful result
			YES ⇒	***If the burner does not ignite:*** - Insulating gas valves turned off - Ignition electrode dirty or broken - Gas valve faulty, if the ignition unit has 230V across terminals 14 - N during the ignition phase - Overheat thermostat faulty or boiler temperature over 100°C - Flue thermostat faulty or in open circuit - Minimum gas pressure to be adjusted on the gas valve (see manual) ***If the burner ignites:*** - Life and neutral reversed polarity - Ionisation electrode dirty or broken. - Condensate siphon is not draining or ionization wiring disconnected - Ignition unit faulty (no ionization)

YES ⇓

YES ⇓

g) Does the pump run?	NO ⇒	- Check if pump is blocked - Pump faulty, if there is 230 V across pump terminals - PCB faulty, if not power is supplied to the pump

YES ⇓

h) Does the flame rise up after 8 seconds?	NO ⇒	- Check and adjust the gas pressures on the gas valve as indicated in the manual - Gas valve modulator faulty, if there is nearly 5 v = across the modulator terminals - PCB faulty, if there is not power to the modulator or the voltage is less than 3V =

YES ⇓

i) Is the water warming up to the tap?	NO ⇒	Is the domestic hot water flow rate greater than the one indicated in the manual ?	NO ⇒	- Domestic hot water exchanger dirty - Check gas valve for correct gas regulation
			YES ⇒	- Reduce the hot water flow rate to the tap

YES ⇓

DECREASE THE HOT WATER FLOW RATE TO APPROXIMATELY 5 LITER PER MINUTE

⇓

j) Does the flame modulate after a few seconds ?	NO ⇒	Check resistance of the NTC sensor and if necessary, replace the NTC	⇒	NTC values 0°C = 33 kΩ 20°C = 12,5 kΩ 60°C = 2,5 kΩ 80°C = 1,3 kΩ	⇒	In case of difficulty: - Check the gas valve for correct gas pressure - Check on the PCB the switches 7 and 8 are set to OFF

YES ⇓

TURN OFF THE HOT WATER TAP

⇓

TURN THE MAIN SELECTOR TO "WINTER", SET THE HEATING KNOB AT MAXIMUM, TIME-CLOCK TO "1"

⇓

k) Does the boiler work?	NO ⇒	Is the room thermostat calling for heating?	NO ⇒	- Set the temperature on the room thermostat
			YES ⇒	Make a link on the PCB-M10 across terminals 39 and 40: - Room thermostat faulty, if the boiler starts working - Faulty time-clock,if no continuity across switch terminals - PCB faulty, if the boiler does not operate

YES ⇓

l) Does the pump start ?	NO ⇒	Are the switches 5 and 6 on the PCB in position OFF ?	NO ⇒	- Set switches 5 and 6 to the off position
			YES ⇒	- Replace PCB

YES ⇓

m) Do radiators heat up?	NO ⇒	Are all the valves of the system turned on ?	NO ⇒	- Turn on all the radiator valves and insulating valves
			YES ⇒	- Bleed air out of the radiators

YES ⇓

n) Is the water pressure stable on the pressure gauge?	NO ⇒	Does the pressure rise up over 2 bar when temperature is above 50°C	NO ⇒	- Verify the filling check valves are turned off
			YES ⇒	- Pressurize the expansion vessel. If leaks occurs from the valve, replace the expansion vessel

YES ⇓

END OF THE TEST

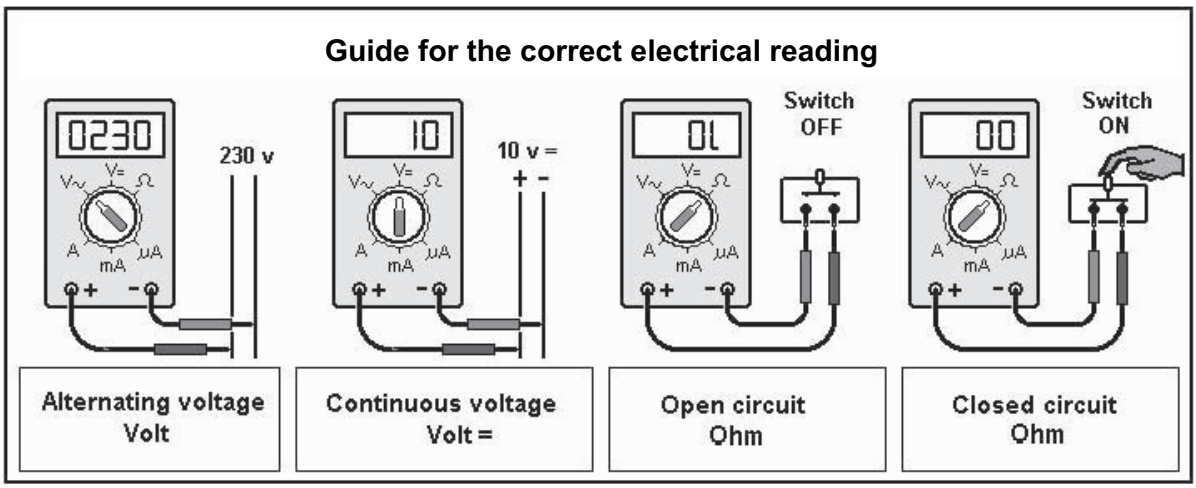

11 Control / Commissioning

Once the appliance is installed, check whether it operates correctly:

- Start the appliance according to the indications of the operating instructions and check whether it operates correctly.
- Check the appliance for leaks (gas and water) and eliminate any leakage found.
- Check that the ignition is correct and that the flames of the burner are uniform.
- Check that the flue exhausts properly.
- Check the full control and safety devices, their setting and their operating states.

12 User information

It is your responsability to ensure that the user knows how to use the appliance. Points to explain:

- Explain to the user the appliance operating principles and demonstrate if required.
- Have a look at the operating instructions together and answer any questions if need be.
- Give the user all of the manuals and documents concerning the appliance and tell the user to keep them near the appliance.
- Explain more precisely the safety principles they should observe.
- Remind the user to regularly service the appliance (every 12 months recommended).

13 Spare parts

In order to guarantee the reliability and quality of the individual components and the correct functioning of the boiler, only authentic spare parts from SAUNIER DUVAL should be used when repairing and servicing the appliance.

14 Maintenance

Warning!

- Before performing the maintenance on the appliance, read carefully the “Safety instructions” chapter.

14.1 Casing

1. Unscrew the screws [1] and slide back the catches [2] to release the front casing [3];
2. Push the front casing [3] upwards and remove it;
3. Unscrew the two screws [4] and pull down the control panel [5];

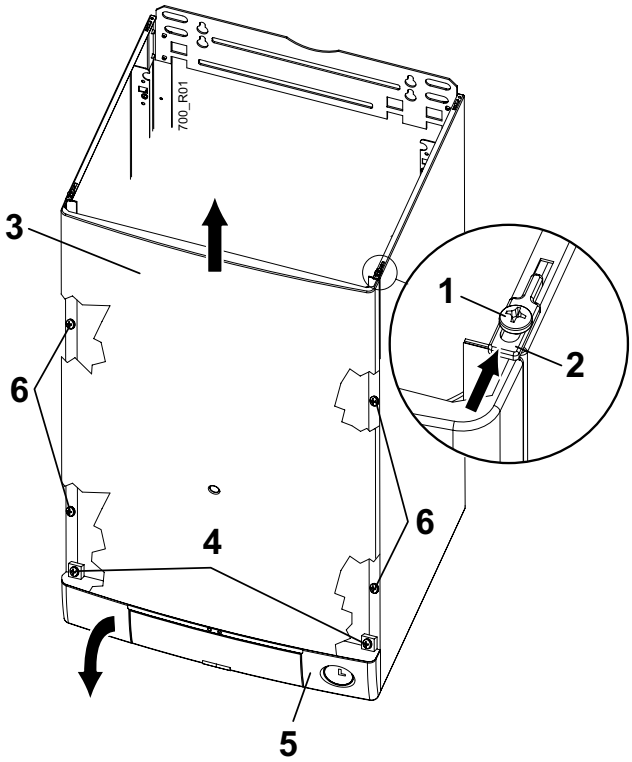

14.2 Combustion chamber

- Unscrew and remove 6 screws securing sealed chamber cover to the boiler. Pull cover forward and off boiler.

14.3 Burner

- Undo main gas supply nut from burner.
- Pull main burner forward, pull off the ignition and flame sense leads from the electrodes and remove burner from boiler.

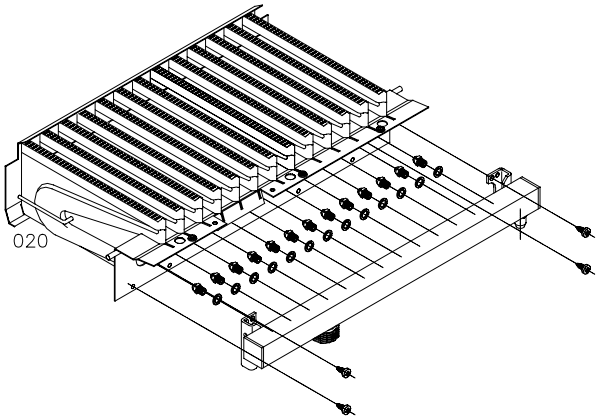

Note: *The washer between main burner and main burner gas supply must be kept for use on reassembly.*

- Remove ignition and flame sense electrodes from burner.
- Unscrew and remove four injector bar retaining screws and separate injector bar from burner.
- Examine and clean injectors as necessary.

Note: *DO NOT use a wire or sharp instrument on the holes.*

14.4 Heat exchanger

- Locate the heat exchanger inside the sealed chamber.
- Gain acces to heat exchanger by removing fan and flue hood.
- Examine heat exchanger for any blockages or build up of deposits.
- Clean heat exchanger with soft brush or vacuum cleaner.

14.5 Reassembly of parts removed for servicing

All parts are replaced in reverse order to removal.

14.6 Flue system

- Check externally to make sure that flue is not blocked
- Inspect flue system to make sure that all fittings are tight and secure.

14.7 Operation of fan

- Switch on electrical supply and turn on gas.
- Set selector switch to 'Winter' ❄ position.
- Light burner by operating external controls (if fitted) to call for heat.
- Do not light the boiler without the sealed chamber cover fitted
- Check that fan operates when burner lit and stops when it goes out.

15 Replacement of parts

Warning!

- Before starting the replacement of parts, read the "Safety instructions" chapter carefully.

15.1 To replace fan

- Slide flue sensing probe insulating boot away from fan.
- Pull off both red and white sensing probe tubes.
- Disconnect power supply and earth leads to fan.
- Slacken, but do not remove, two screws securing fan to rear of flue hood.
- Supporting fan, unscrew and remove two screws securing fan to front of flue hood.
- Lower fan from top of boiler then tilt base of fan to right hand side. Gently ease fan forwards and out of boiler.
- Transfer flue sensing probe assembly onto replacement fan.
- Fit replacement fan in reverse order to removal.

Note: Ensure white air sensing tube is connected to upper probe and red tube to lower probe.

15.2 To replace air pressure switch

- Locate air pressure switch in upper right hand corner of sealed chamber.
- Pull off plastic tubes from base of switch.
- Remove electrical connections from switch.
- Unscrew and remove two screws securing switch to upper panel and remove switch.
- Fit electrical connections to replacement switch as follows:

NO - BROWN
NC - BLACK
C - BLUE

- Fit replacement switch in reverse order to removal.

Important: Refit red tube to right hand connector and white tube to left hand connector.

15.3 To replace pump

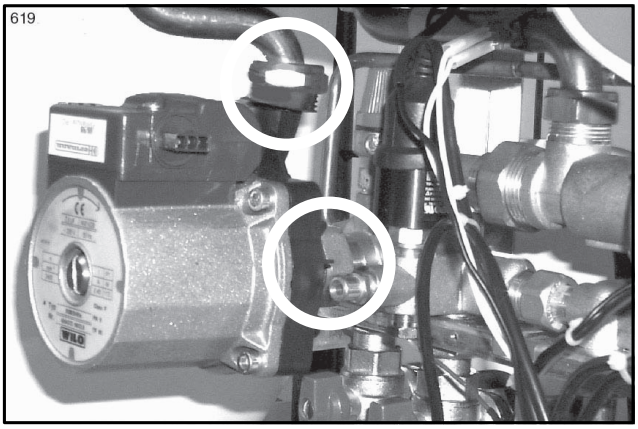

- Drain down boiler heating circuit as follows:
- From below boiler, close isolating valves on flow and return connections.
- Open boiler drain valve to right of pump.

Note: It is not necessary to drain down entire heating circuit to carry out this work.

- Gain access to the pump by lowering the controls panel.
- Pull off electrical connection to pump.
- Supporting pump, unscrew pump connection nuts at top and rear of pump. Remove pump by lifting forward and out of boiler.
- Fit replacement pump in reverse order to removal.
- Open isolating valves on flow and return connections,
- Refill, vent and pressurise boiler. Check for leaks.

15.4 To replace gas valve

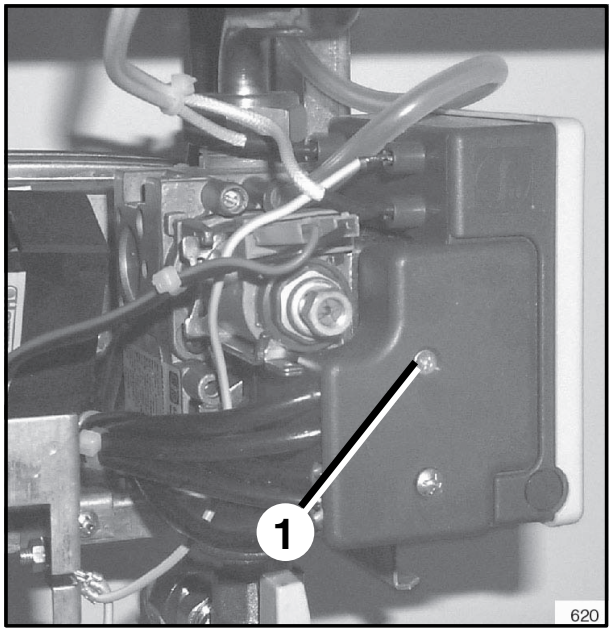

- Isolate boiler from gas supply.
- Gain access to the gas valve by lowering the controls panel.
- Remove clear plastic sensing pipe from gas valve.
- Unscrew and remove upper screw (1) holding gas valve ignition box onto gas valve body.
- Carefully pull off ignition box, leaving electrical wiring connected, and move clear of gas valve.
- Remove electrical connections to gas valve modulating coil.
- Disconnect gas inlet cock from boiler.
- Undo nuts on gas valve to burner supply pipe and swing pipe clear of gas valve.
- Unscrew and remove two screws securing gas valve to boiler lower frame.
- Fit replacement gas valve in reverse order to removal.

Note: *When refitting electrical connections to gas valve modulating coil, the polarity is not important.*

15.5 To replace domestic heat exchanger

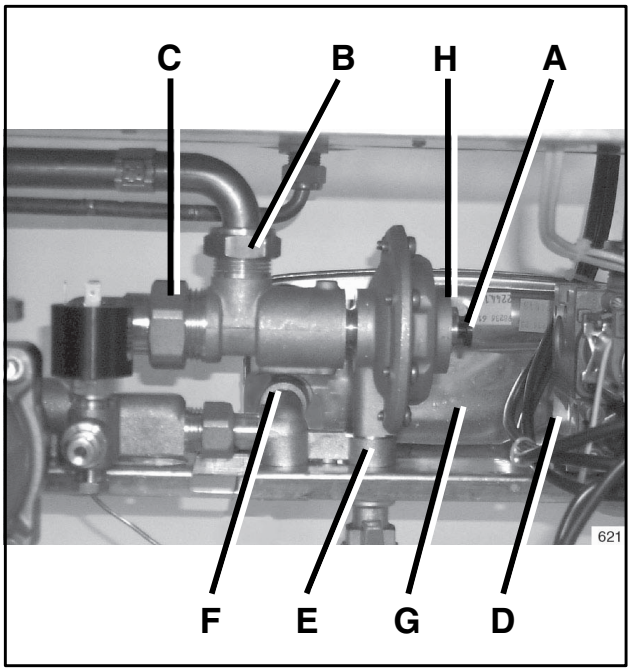

- Drain down heating circuit of boiler as described previously.
- Drain down hot water circuit of boiler as follows:
- From below boiler, close cold water inlet isolating valve.
- Open a hot tap to drain hot water circuit.
- Remove clip (A) and pull off microswitch assembly
- Undo connections (B), (C), (D) and (F) on 3 way valve
- Grasp 3 way valve and lift upwards releasing 'O' ring joint (E)
- Remove 3 way valve and domestic heat exchanger assembly (G) from boiler.

Important: Take care not to drip water into PCB housing when removing assembly.

- Fit replacement heat exchanger (G) in reverse order to removal.
- Open isolating valves on flow and return connections, refill, vent and pressurise boiler. Check for leaks.
- Open cold water isolating valve. Check for leaks.

15.6 To replace thermistor

- Locate thermistor clipped onto flow pipe behind and to the right of the pump.
- Pull off clip from flow pipe.
- Remove electrical connections from thermistor.
- Fit replacement thermistor in reverse order to removal.

Note: *1) No heat sink compound is required.*

2) The polarity of the connections is not important.

15.7 To replace overheat thermostat

- Locate overheat thermostat on left hand side of main heat exchanger at rear.
- Remove electrical connections from overheat thermostat.
- Unscrew and remove two screws securing overheat thermostat to heat exchanger.
- Fit replacement overheat thermostat in reverse order to removal.

Note: *1) No heat sink compound is required.*

2) The polarity of the connections is not important.

16 Technical data

Boiler type B22-C12-C32-C42-C52-C62-C82

Description	Unit	SEMIA CONDENS F24 E	SEMIA CONDENS F30 E
Gas category		II_{2H3+}	II_{2H3+}
Heating output at 80°C/60°C (Hi)	kW	18.1 - 24.5	11.1 - 28.6
Efficiency calculated on net calorific value at 80/60°C	%	94.9 - 95.8	95.2 - 97.1
Heating output at 50°C/30°C (P)	kW	19.2 - 26.2	15.9 - 30.6
Efficiency calculated on net calorific value at 50/30°C	%	101.1 - 102.2	100.5 - 103.8
Heat input (Hs) (heating)	kW	21.08 - 28.4	17.76 - 32.74
Heat input (Hs) (DHW)	kW	11.65 - 28.4	13.3 - 32.74
Maximum hot water temperature	°C	80	80
Heating			
Heating temperature range (standard)	C°	30 - 80	30 - 80
Heating temperature range (low temp.)	C°	25 - 45	25 - 45
Expansion vessel, useful capacity	l	8	8
Expansion tank initial pressure	bar	1	1
Safety valve, maximum service pressure (PMS)	bar	3	3
Domestic hot water			
Hot water temperature range	°C	30-70	30-70
Specific flow rate (D) (ΔT 25°C)	l/min	14.0	16.4
Specific flow rate (D) (ΔT 30°C)	l/min	11.7	13.7
Specific flow rate (D) (ΔT 35°C)	l/min	10.0	11.7
Threshold flow rate	l/min	3	3
Maximum supply pressure	bar	6	6
Minimum operating pressure	bar	0.8	0.8
Combustion			
Product outlet flow rate	g/s	15.9	16.4
Product outlet temperature	°C	85	70
Values of product outlet (measured on nominal heating output with G20 reference gas):			
CO	ppm	38.0	54.8
CO2	%	6.40	7.20
NOx balance	mg/ kWh	163.1	122.0

Description	Unit	SEMIA CONDENS F24 E	SEMIA CONDENS F30 E
Dimensions:			
Height	mm	750	750
Width	mm	400	400
Depth	mm	347	347
Net weight	kg	41.5	43
Supply voltage	V/Hz	230/50	230/50
Maximum absorbed power	W	145	150
Electric protection		IP X4D	IP X4D
CE number		0694 BN 3710	0694 BN 3710

Technical data depending on the gas type	Unit	SEMIA CONDENS F24 E	SEMIA CONDENS F30 E
Natural gas G 20 (1)			
Flow rate at maximum input	m^3/h	2.71	3.12
Flow rate at minimum input	m^3/h	1.11	1.27
Inlet pressure	mbar	20	20
Burner injector diameter	mm	1.25	1.30

(1) 15 °C, 1013,25 mbar

16.1 Burner pressure tables

SEMIA CONDENS F24 E		
HEAT OUTPUT		PRESSURE
kW	Btu/hr	mbar
9.5	32566	2.1
10	34120	2.3
11	37532	2.7
12	40944	3.2
13	44356	3.7
14	47768	4.3
15	51180	4.9
16	54592	5.5
17	58004	6.1
18	61416	6.8
19	64828	7.5
20	68240	8.2
21	71652	9.0
22	75064	9.8
23	78476	10.6
24	81888	11.4
24.5	83594	11.6

SEMIA CONDENS F30 E		
HEAT OUTPUT		PRESSURE
kW	Btu/hr	mbar
11.1	37832	2.2
12	40944	2.6
13	44356	3.0
14	47768	3.4
15	51180	3.9
16	54592	4.4
17	58004	4.9
18	61416	5.5
19	64828	6.1
20	68240	6.7
21	71652	7.3
22	75064	7.9
23	78476	8.6
24	81888	9.3
25	85300	10.0
26	88712	10.8
27	92124	11.5
28	95536	12.3
28.6	97735	12.7

17 Boiler schematic

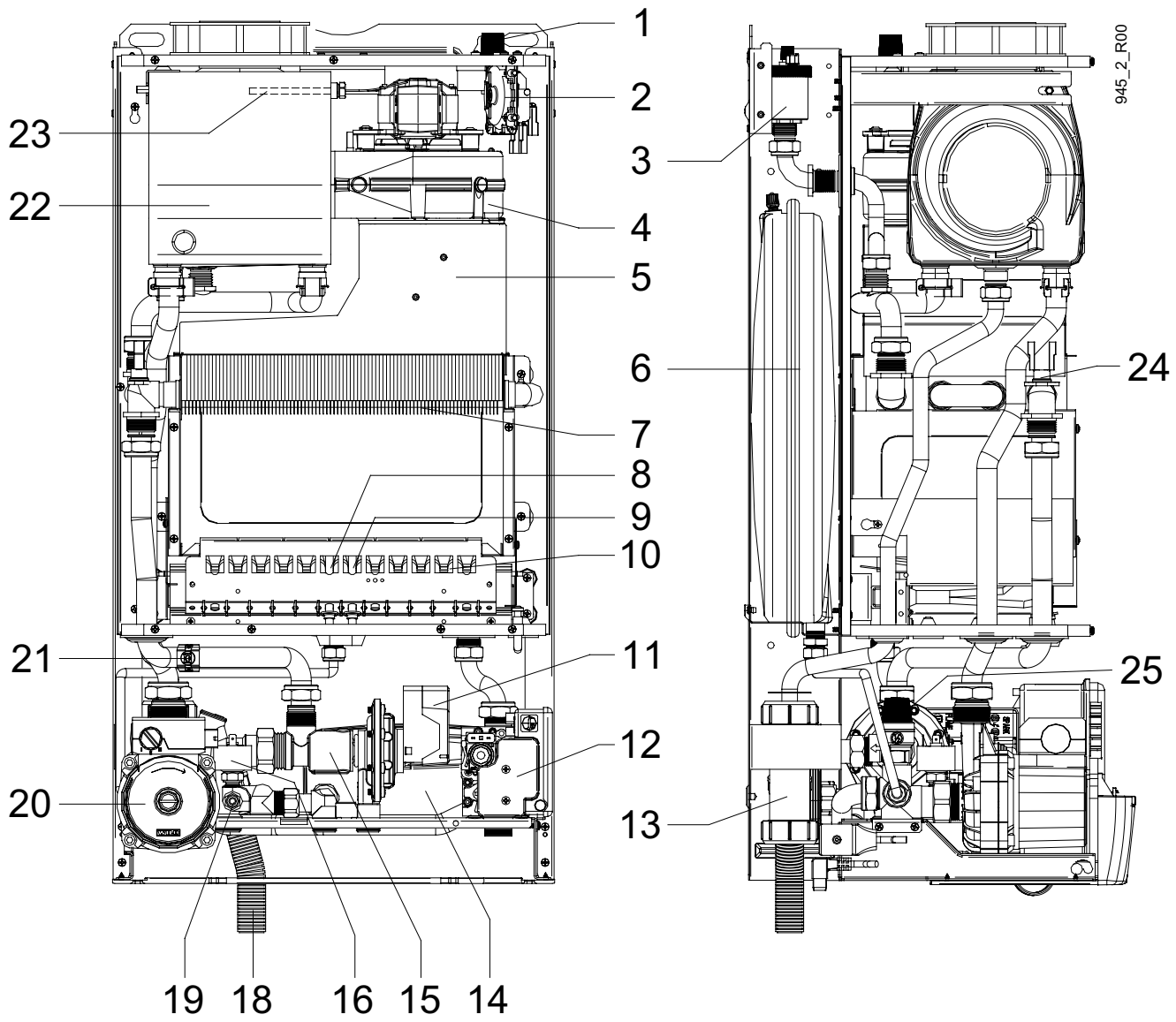

1 Overheat thermostat (manual reset control)
2 Air pressure switch
3 Automatic air vent
4 Fan
5 Flue hood
6 Expansion vessel
7 Primary heat exchanger
8 Flame sense electrode
9 Ignition electrode
10 Burner
11 Water valve
12 Gas valve
13 Syphonic condensate trap
14 Domestic plate to plate heat exchanger
15 Hydraulic 3-way valve
16 Low pressure sensor
18 Condense outlet pipe
19 Drain valve
20 Pump
21 Thermistor
22 Recuperator
23 Flue overheat thermostat (probe)
24 Overheat thermostat
25 Pressure relief valve (3 bar)

Saunier Duval

BENCHMARK No. | | | | | | |

benchmark™ COLLECTIVE MARK

GAS BOILER COMMISSIONING CHECKLIST

BOILER SERIAL No. _____ **NOTIFICATION No.** _____

CONTROLS *To comply with the Building Regulations, each section must have a tick in one or other of the boxes*

TIME & TEMPERATURE CONTROL TO HEATING	ROOM T/STAT & PROGRAMMER/TIMER	☐	PROGRAMMABLE ROOMSTAT	☐
TIME & TEMPERATURE CONTROL TO HOT WATER	CYLINDER T/STAT & PROGRAMMER/TIMER	☐	COMBI BOILER	☐
HEATING ZONE VALVES	FITTED	☐	NOT REQUIRED	☐
HOT WATER ZONE VALVES	FITTED	☐	NOT REQUIRED	☐
THERMOSTATIC RADIATOR VALVES	FITTED	☐		
AUTOMATIC BYPASS TO SYSTEM	FITTED	☐	NOT REQUIRED	☐

FOR ALL BOILERS CONFIRM THE FOLLOWING

THE SYSTEM HAS BEEN FLUSHED IN ACCORDANCE WITH THE BOILER MANUFACTURER'S INSTRUCTIONS? ☐

THE SYSTEM CLEANER USED

THE INHIBITOR USED

FOR THE CENTRAL HEATING MODE, MEASURE & RECORD

GAS RATE		m^3/hr		ft^3/hr
BURNER OPERATING PRESSURE (IF APPLICABLE)	☐	N/A		mbar
CENTRAL HEATING FLOW TEMPERATURE				°C
CENTRAL HEATING RETURN TEMPERATURE				°C

FOR COMBINATION BOILERS ONLY

HAS A WATER SCALE REDUCER BEEN FITTED? YES ☐ NO ☐

WHAT TYPE OF SCALE REDUCER HAS BEEN FITTED?

FOR THE DOMESTIC HOT WATER MODE, MEASURE & RECORD

GAS RATE		m^3/hr		ft^3/hr
MAXIMUM BURNER OPERATING PRESSURE (IF APPLICABLE)	☐	N/A		mbar
COLD WATER INLET TEMPERATURE				°C
HOT WATER OUTLET TEMPERATURE				°C
WATER FLOW RATE				lts/min

FOR CONDENSING BOILERS ONLY CONFIRM THE FOLLOWING

THE CONDENSATE DRAIN HAS BEEN INSTALLED IN ACCORDANCE WITH THE MANUFACTURER'S INSTRUCTIONS? YES ☐

FOR ALL INSTALLATIONS CONFIRM THE FOLLOWING

THE HEATING AND HOT WATER SYSTEM COMPLIES WITH CURRENT BUILDING REGULATIONS ☐

THE APPLIANCE AND ASSOCIATED EQUIPMENT HAS BEEN INSTALLED AND COMMISSIONED IN ACCORDANCE WITH THE MANUFACTURER'S INSTRUCTIONS ☐

IF REQUIRED BY THE MANUFACTURER, HAVE YOU RECORDED A CO/CO_2 RATIO READING? N/A ☐ YES _____ CO/CO_2 RATIO

THE OPERATION OF THE APPLIANCE AND SYSTEM CONTROLS HAVE BEEN DEMONSTRATED TO THE CUSTOMER ☐

THE MANUFACTURER'S LITERATURE HAS BEEN LEFT WITH THE CUSTOMER ☐

COMMISSIONING ENG'S NAME PRINT _____ CORGI ID No. _____

SIGN _____ DATE _____

SERVICE INTERVAL RECORD

It is recommended that your heating system is serviced regularly
and that you complete the appropriate Service Interval Record Below.

Service Provider. Before completing the appropriate Service Interval Record below, please ensure you have carried out the service as described in the boiler manufacturer's instructions. Always use the manufacturer's specified spare part when replacing all controls

SERVICE 1 DATE
ENGINEER NAME
COMPANY NAME
TEL No.
CORGI ID CARD SERIAL No.
COMMENTS
SIGNATURE

SERVICE 2 DATE
ENGINEER NAME
COMPANY NAME
TEL No.
CORGI ID CARD SERIAL No.
COMMENTS
SIGNATURE

SERVICE 3 DATE
ENGINEER NAME
COMPANY NAME
TEL No.
CORGI ID CARD SERIAL No.
COMMENTS
SIGNATURE

SERVICE 4 DATE
ENGINEER NAME
COMPANY NAME
TEL No.
CORGI ID CARD SERIAL No.
COMMENTS
SIGNATURE

SERVICE 5 DATE
ENGINEER NAME
COMPANY NAME
TEL No.
CORGI ID CARD SERIAL No.
COMMENTS
SIGNATURE

SERVICE 6 DATE
ENGINEER NAME
COMPANY NAME
TEL No.
CORGI ID CARD SERIAL No.
COMMENTS
SIGNATURE

SERVICE 7 DATE
ENGINEER NAME
COMPANY NAME
TEL No.
CORGI ID CARD SERIAL No.
COMMENTS
SIGNATURE

SERVICE 8 DATE
ENGINEER NAME
COMPANY NAME
TEL No.
CORGI ID CARD SERIAL No.
COMMENTS
SIGNATURE

SERVICE 9 DATE
ENGINEER NAME
COMPANY NAME
TEL No.
CORGI ID CARD SERIAL No.
COMMENTS
SIGNATURE

SERVICE 10 DATE
ENGINEER NAME
COMPANY NAME
TEL No.
CORGI ID CARD SERIAL No.
COMMENTS
SIGNATURE

Saunier Duval

10/2005 - 982.160099/001

Saunier Duval

Saunier Duval, Nottingham Road
Belper,Derbyshire
DE56 1JT
Tel. 00 44 (0)1773 525914
Fax. 00 44 (0)1773 828070
www.saunier-duval.co.uk